GENERAL INFORMATION

The present spare parts order exactly the right spare parts

When ordering specify:

1) the part's code number followed by its description; quantity needed;

2) the motorcycle's serial number, stamped on the steering head.

Reference to right and left apply to the vehicle in terms of its direction of move-ment.

Spare parts drawings are general and do not represent the part.

The contents of this catalogue are general and can undergo changes without prior notice.

VALIDITY

f.m.	Until V.I.N.
d.m.	From V.I.N.
f.m.m.	Up to engine number
d.m.m.	From engine number

Ducati Motor Holding S.p.A.
Commercial and Administation Office:
Via A. Cavalieri Ducati n. 3
40132 Bologna, Italy
Telefono 051 6413111
Fax 051 406580
Internet www.ducati.com

CATALOGUE No: *915.1.204.1A*
ISSUED: *02 - 04*

PAINTS

Colore	Codice	Codice		Codice
Paint	Code	Code		Code
Vernis	Code	Code	**PPG**	Code
Slacken	Code	Code		Code
Lacas	Codice	Codice		Codice

"Rosso Anniversary DUCATI"	473.101

CATALOGUE No: *915.1.204.1A*
ISSUED: *02 - 04*

page **CONTENTS**

page		
4	001	WORKSHOP SPECIAL TOOLS
6	001a	WORKSHOP SPECIAL TOOLS
8	001b	WORKSHOP SPECIAL TOOLS
10	001c	DIAGNOSIS TESTER MATHESIS
12	001d	WORKSHOP SPECIAL TOOLS
14	002	GEARCHANGE
16	003	GEAR-BOX
18	004	CLUTCH
20	005	CLUTCH COVER
22	005a	CLUTCH COVER
24	006	CRANKSHAFT
26	007	CYLINDERS - PISTONS
28	008	TIMING
30	009	FILTERS AND OIL PUMP
32	010	HALF CRANKCASES
34	010a	HALF CRANKCASES
36	011	WATER PUMP - ALTERNATOR COVER
38	011a	WATER PUMP - ALTERNATOR COVER
40	012	ELECTRIC STARTER AND IGNITION
42	013	HEAD: TIMING
44	014	COLLECTORS AND HEAD COVERS
46	014a	HEAD COVERS
48	015	HEAD
50	016	OIL COOLER
52	017	THROTTLE BODY
54	018	BATTERY BOX MOUNT
56	018a	INJECTION SYSTEM
58	019	EXHAUST SYSTEM
60	019a	CARBON EXHAUST SYSTEM
62	020	FRONT HEAD-LIGHT AND INSTRUMENT PANEL
64	020a	FRONTO WIRING
66	021	HALF-HANDLEBARS - SHOCK-ADSORBER
68	021a	HALF-HANDLEBARS - SHOCK-ADSORBER
70	021b	FRONT FORK
72	022	FRAME
74	022a	STAND
76	023	CLUTCH CONTROL
78	024	FRONT HYDRAULIC BRAKE
80	025	REAR HYDRAULIC BRAKE
82	026	FRONT AND REAR WHEELS
84	027	REAR FRAME(mon)
86	027a	NUMBER PLATE HOLDER
88	028	REAR SUSPENSION
90	028a	REAR FORK
92	029	AIR INDUCTION-OIL VENT
94	030	WATER RADIATOR ASSY
96	031	COOLING CIRCUIT
98	032	FUEL TANK
100	032a	FUEL SYSTEM
102	033	SEAT
104	034	HEADLIGHT FAIRING
106	034a	FAIRING
108	035	FUEL INFEED
110	036	MARKING PLATES

CATALOGUE No: *915.1.204.1A*
ISSUED: *02 - 04*

DRAWING **001** **WORKSHOP SPECIAL TOOLS**

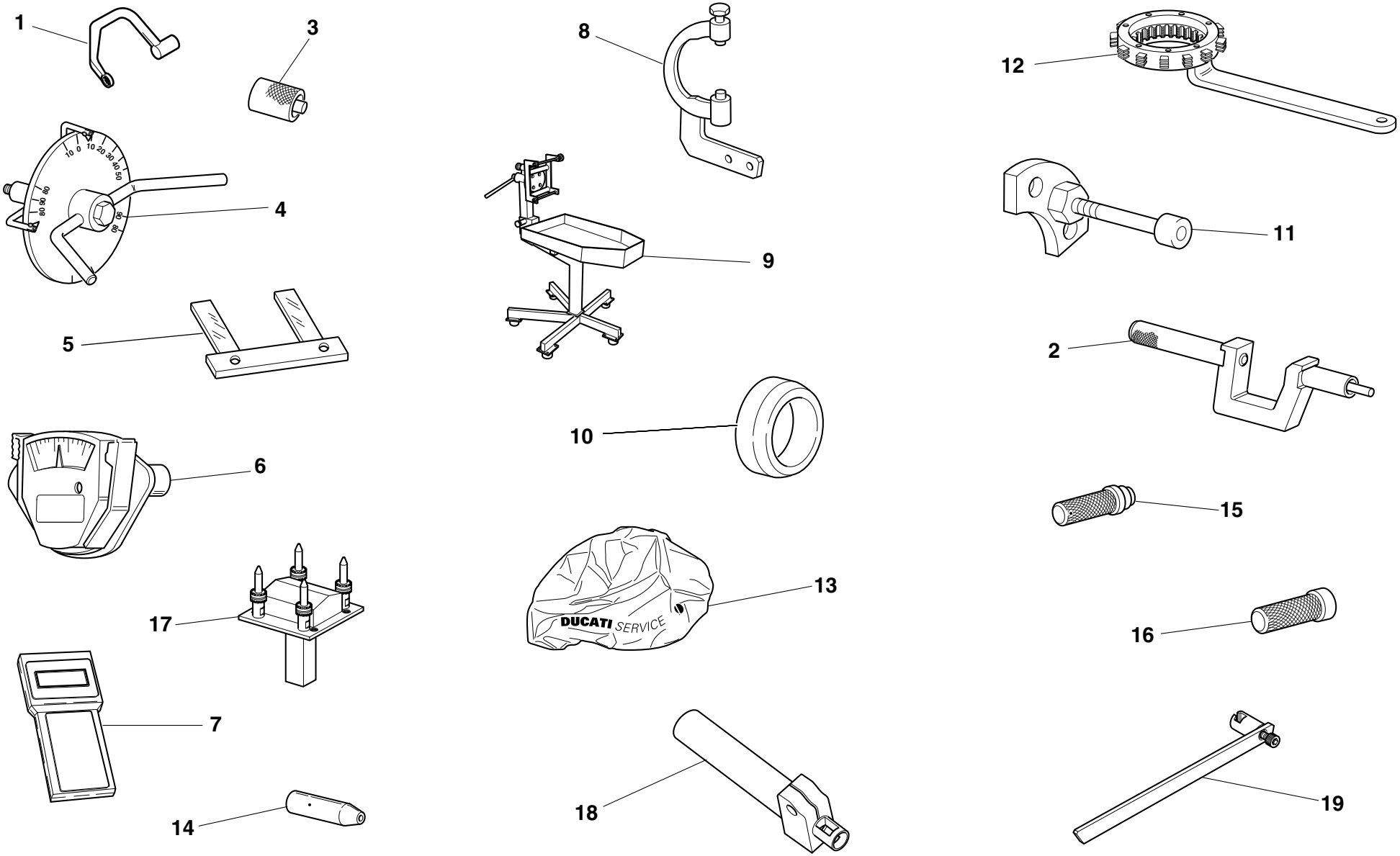

DRAWING **001** **WORKSHOP SPECIAL TOOLS**

NOTES	NO.	CODE NO.	DESCRIPTION	VALIDITY	Q.TY
	1	88713.2096	Head nuts holder wrench		1
	2	88713.1429	Tool to drive valve seal ring ø7		1
	3	88765.1298	Spacer for checking lower valve shim		1
	4	88713.0123	Degree wheel holder tool for ignition advance check		1
	4	98112.0002	Degree wheel		1
	5	88765.1000	Fork feeler gauge 0.1 mm		1
	5	88765.1005	Fork feeler gauge 0.2 mm		1
	5	88765.1006	Fork feeler gauge 0.3 mm		1
	6	88765.0999	Timing belt control gauge		1
	7	88765.1363A	Check intrument		1
GB	7	88765.1363B	Check intrument		1
D	7	88765.1363C	Check intrument		1
F	7	88765.1363D	Check intrument		1
E	7	88765.1363E	Check intrument		1
	8	88713.2593	Flywheel Wrench		1
	9	88713.1832	Bench for engine repair		1
	10	88700.5665	Sleeve for installing clutch bell gear		1
	11	88713.1091	Plate for positioning gear engagement fork		1
	12	88713.2133	Wrench to hold cluch housing drum steady		1
	13	88713.1886	Engine canvas		1
	14	88700.5749	Crankcases assembling cap		1
	15	88713.0869	Tool for assembling water pump front seal		1
	16	88713.0870	Tool for assembling water pump front seal		1
	17	88713.2346	Head mounting base		1
	18	041.1.055.1A	Tool to fit valve collets		1
	19	041.1.191.1A	Tool to fit valve collets		1

NOTES	NO.	CODE NO.	DESCRIPTION	VALIDITY	Q.TY

CATALOGUE No: *915.1.204.1A*
ISSUED: *02 - 04*

DRAWING **001a** **WORKSHOP SPECIAL TOOLS**

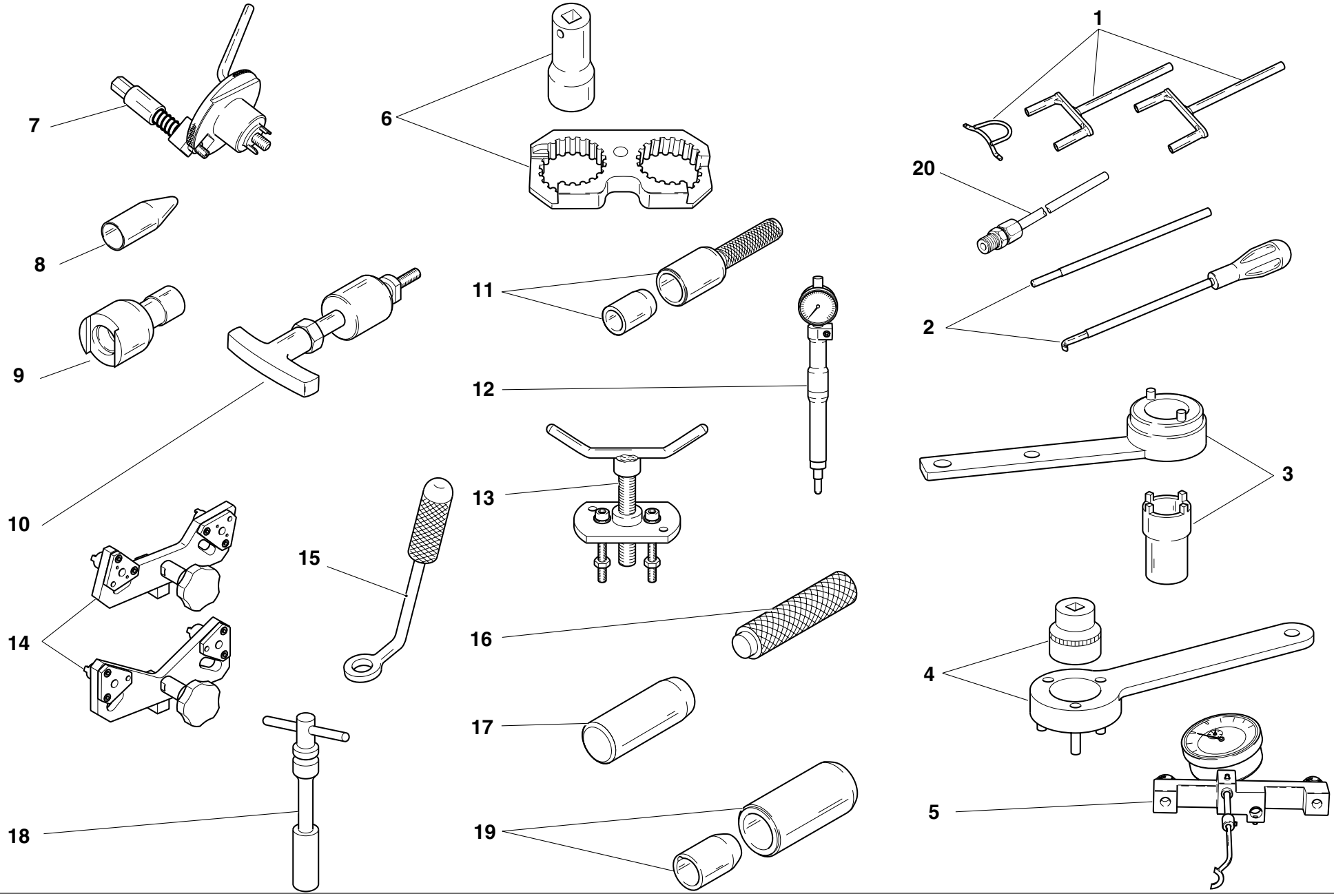

DRAWING **001a** **WORKSHOP SPECIAL TOOLS**

NOTES	NO.	CODE NO.	DESCRIPTION	VALIDITY	Q.TY
	1	88713.2068	Closing rocker pre-load kit		1
	2	88713.2069	Rocker spring pre-load compound kit		1
	3	88713.1805	Driving roller tightening tool		1
	4	88713.2102	Primary drive gear tightening tool		1
	5	88765.1181	Valve lift gauge		1
	6	88713.1806	Reaction tool for belt roller tightening		1
	7	88713.2011	Tool to hold crankshaft in TDC position		1
	8	88713.1920	Tool to fit O-rings onto stud bolts		1
	9	88713.1821	Wrench to tighten tensioning bolts		1
	10	88713.1994	Rocker shaft extractor		1
	11	88713.2060	Seal ring driving tool		1
	12	88765.1188	T.D.C. control gauge		1
	13	88713.1749	Drive roller puller		1
	14	88713.1791	Belt roller timing tool		1
	15	88713.1904	Half-rings mounting punch tool		1
	16	88713.1980	Drift to drive retainers onto shafts		1
	17	88713.2066	Tool to fit cam blanking caps		1
	18	88713.1914	Spark plug tool		1
	19	88713.1906	Tool to fit seals on camshafts		1
	20	88713.1010	Union for exhaust gas suction		1

NOTES	NO.	CODE NO.	DESCRIPTION	VALIDITY	Q.TY

CATALOGUE No: *915.1.204.1A*
ISSUED: *02 - 04*

DRAWING **001b** **WORKSHOP SPECIAL TOOLS**

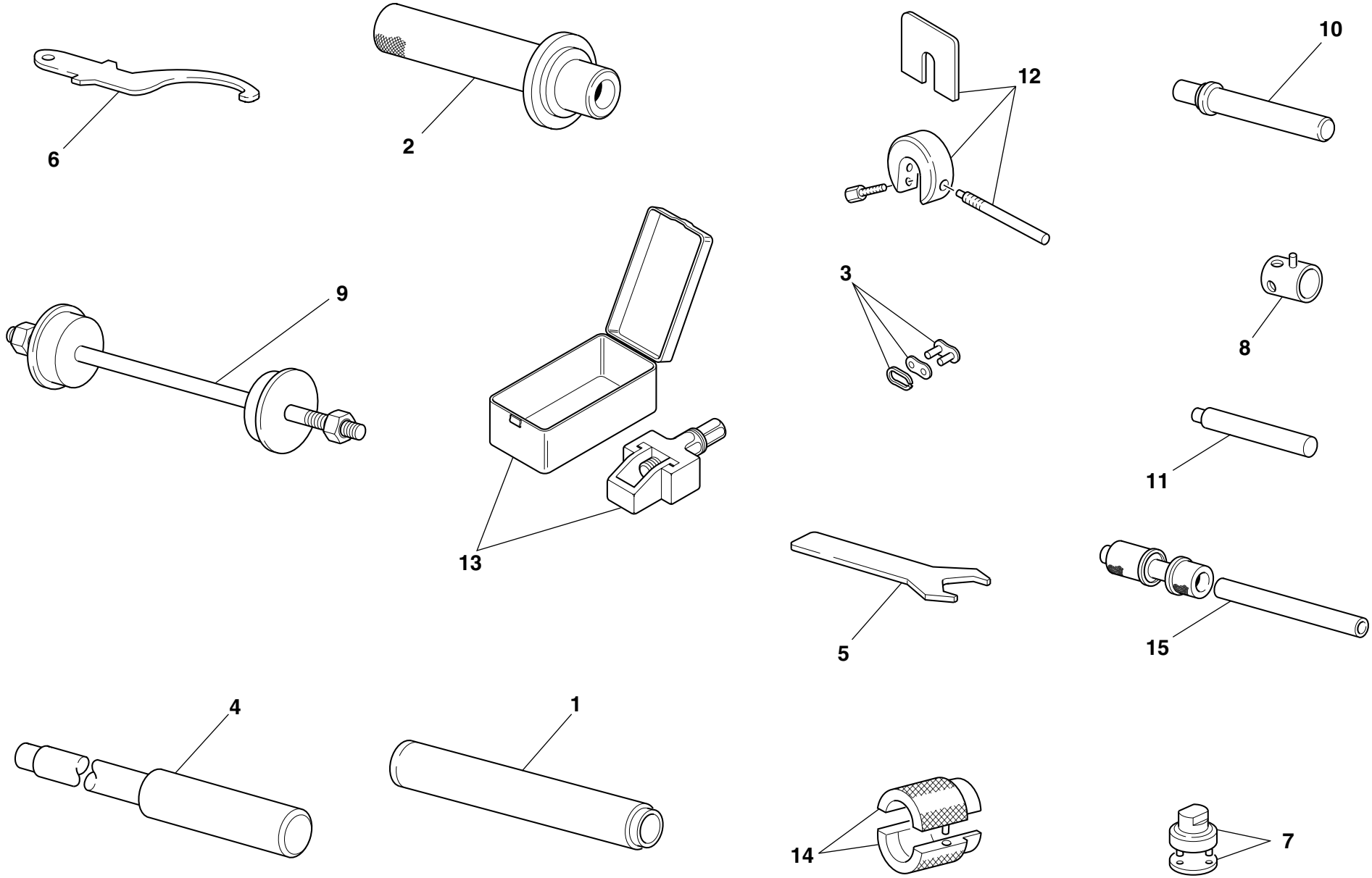

DRAWING **001b** **WORKSHOP SPECIAL TOOLS**

NOTES	NO.	CODE NO.	DESCRIPTION	VALIDITY	Q.TY
	1	88713.1072	Stopper for driving the half bearing of the steering head base		1
	2	88713.1068	Stopper for assembling the rear fork roller bearings		1
	3	677.4.003.1A	Coupling		1
	4	88713.1074	Stopper for disassembling the swingarm pivot		1
	5	88713.1077	Wrench for seat lock nut		1
	6	88713.1037	Wrench for adjusting the steering head		1
	7	88713.1058	Wrench for assembling the steering head cap		1
	8	8000.70139	Wrench for front wheel spindle		1
	9	88713.1062	Tool for assembling the steering head bearings		1
	10	88713.1071	Stopper for assembling the rocker needle bearings		1
	11	88713.1057	Stopper for inserting the steering damper bearing		1
	12	88713.0957	Tool for holding SHOWA fork spacer		1
	13	88713.1344	Tool for assembling chain		1
	14	88713.1096	Tool for overhauling SHOWA forks - assembling seal ring		1
	15	88713.2409	Tool for assembling the swingarm ball bearings		1

NOTES	NO.	CODE NO.	DESCRIPTION	VALIDITY	Q.TY

CATALOGUE No: *915.1.204.1A*
ISSUED: *02 - 04*

DRAWING **001c** **DIAGNOSIS TESTER MATHESIS**

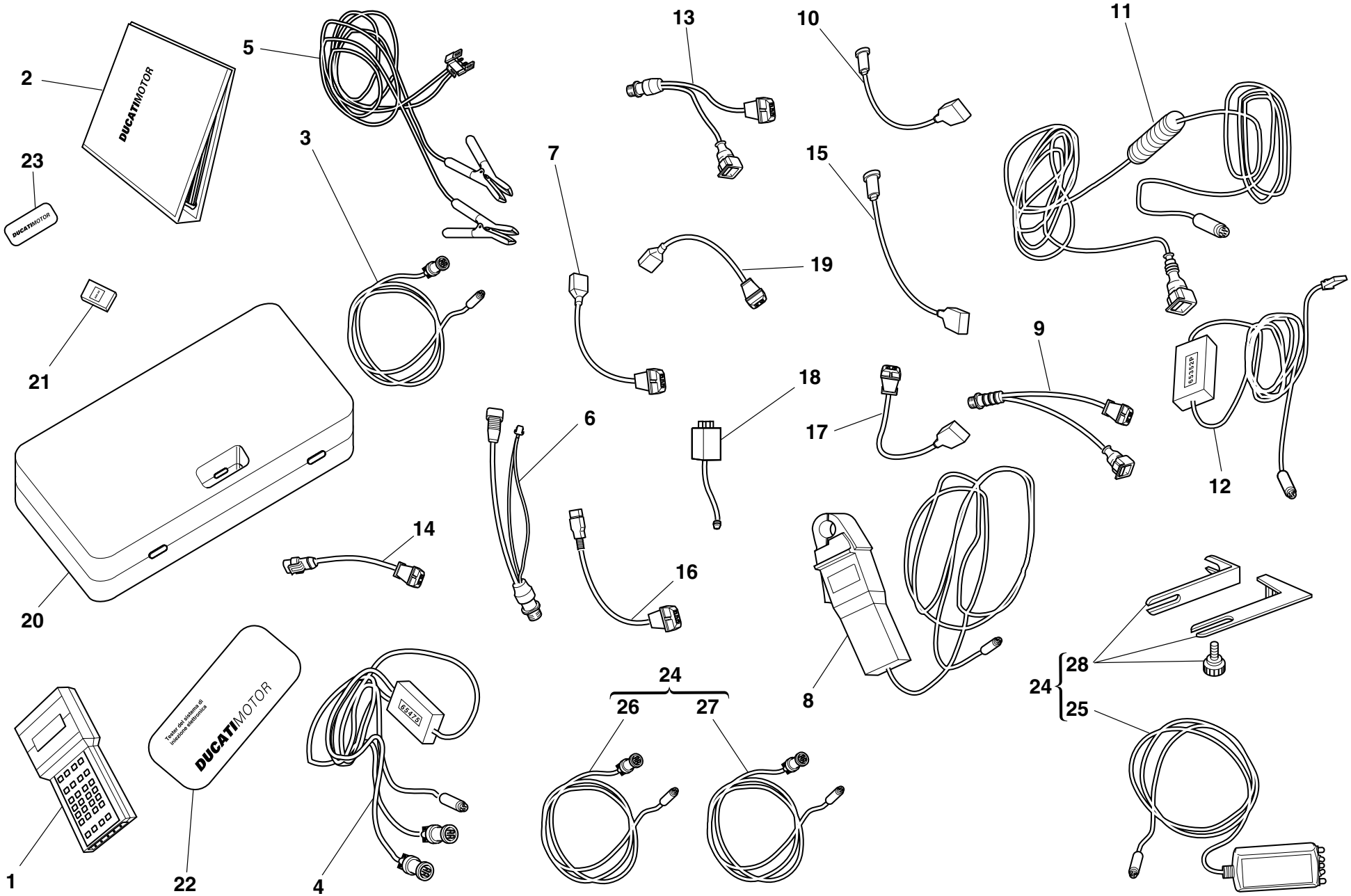

DRAWING **001c** **DIAGNOSIS TESTER MATHESIS**

NOTES	NO.	CODE NO.	DESCRIPTION	VALIDITY	Q.TY
	1	88765.1126Z	Bare Mathesis		1
	2	914.7.023.1A	Italian manual		1
	2	914.7.023.1B	English manual		1
	2	914.7.023.1C	German manual		1
	2	914.7.023.1D	Franch manual		1
	2	914.7.023.1E	Spanish manual		1
	3	88765.1126R	Main cable Mathesis		1
	4	88765.1126A	Pickup Control cable		1
	5	88765.1126Q	Battery mains cable		1
	6	88765.1126	Mains cable adapter for self diagnosis		1
	7	88765.1126N	Sensor for absolute pressure sampling		1
	8	88765.1126V	Amperometer plier		1
	9	88765.1126E	Adapter for 3 wires Pickup test cable		1
	10	88765.1126P	Sensor for air temperature sampling		1
	11	88765.1126C	Cable for potentiometer adjustement		1
	12	88765.1126B	Test cable and speed indicator adjustement		1
	13	88765.1126F	Adapter for 2 wires Pickup test cable		1
	14	88765.1126D	Adapter for potentiometer adjustement		1
	15	552.4.028.1A	Sensor for small throttle potentiometer sampling		1
	16	88765.1126H	Sensor for throttle potentiomer sampling		1
	17	88765.1126G	Sensor for air/water temperature sampling		1
	18	88765.1126M	Sfety remote switch		1
	19	88765.1126L	2 Wires sampling Pickup sensor		1
	20	88765.1126U	Case with sponge		1
	21	88765.1073	Italian memory card		1
	21	88765.1074	English memory card		1
	21	88765.1075	German memory card		1

NOTES	NO.	CODE NO.	DESCRIPTION	VALIDITY	Q.TY
	21	88765.1076	French memory card		1
	21	88765.1077	Spanish memory card		1
	22	88765.1126S	DUCATI sticker for case		1
	23	88765.1126T	DUCATI sticker RH/LH side		1
	24	88765.1369A	Belt tensioning kit		1
GB	24	88765.1369B	Belt tensioning kit		1
D	24	88765.1369C	Belt tensioning kit		1
F	24	88765.1369D	Belt tensioning kit		1
E	24	88765.1369E	Belt tensioning kit		1
	25	88765.1371	Sensor		1
	26	88765.1372	Main cable		1
	27	88765.1373	Cable extension		1
	28	88765.1374	Bracket		1

CATALOGUE No: *915.1.204.1A*
ISSUED: *02 - 04*

DRAWING **001d** **WORKSHOP SPECIAL TOOLS**

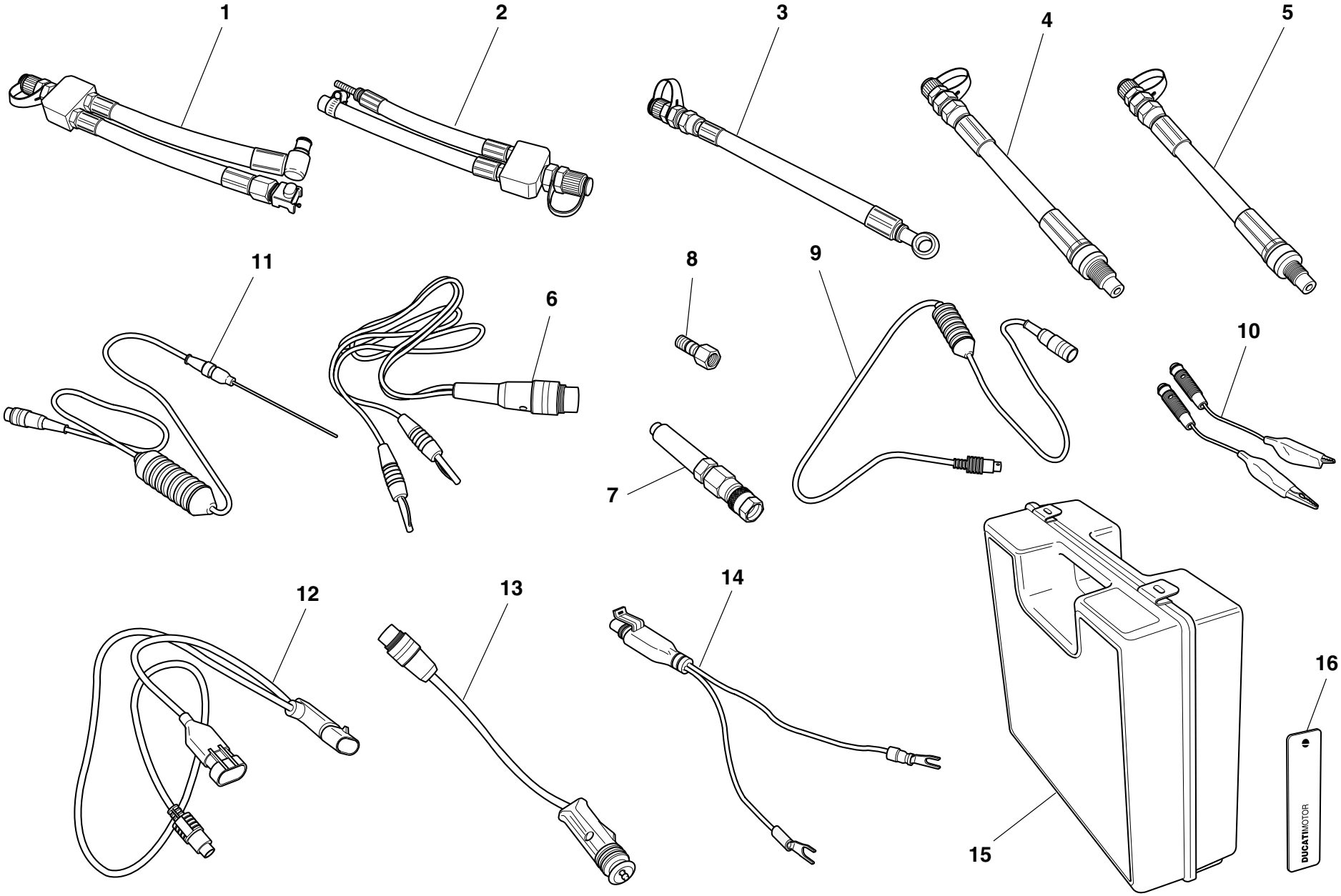

DRAWING **001d** **WORKSHOP SPECIAL TOOLS**

NOTES	NO.	CODE NO.	DESCRIPTION	VALIDITY	Q.TY
	-	88765.1241	Check intrument		1
GB	-	88765.1242	Check intrument		1
D	-	88765.1243	Check intrument		1
F	-	88765.1244	Check intrument		1
E	-	88765.1245	Check intrument		1
	1	590.1.189.1A	Fuel pressure line HS.		1
	2	590.1.190.1A	Fuel pressure line ST/SS/M.		1
	3	875.1.065.1A	Oil pressure line		1
	4	552.1.037.1A	Fitting - cylinder compression M12		1
	5	552.1.038.1A	Fitting - cylinder compression M10		1
	6	514.1.037.1A	Cable Volt PF DUC 21		1
	7	552.1.039.1A	Pressure sensor		1
	8	814.1.114.1A	Oil pressure fitting		1
	9	514.1.032.1A	Cable for supplementary tests		1
	10	514.1.035.1A	Red clamp cable		1
	10	514.1.036.1A	Black clamp cable		1
	11	552.1.040.1A	Temperature probe		1
	12	514.1.034.1A	Main cable PF A621		1
	13	514.1.033.1A	Electric lighter connection adapter (ST)		1
	14	514.1.038.1A	Battery connection adapter		1
	15	698.1.033.1A	Red case with sponge rubber		1
	16	88765.1126T	DUCATI sticker RH/LH side		2

NOTES	NO.	CODE NO.	DESCRIPTION	VALIDITY	Q.TY

CATALOGUE No: *915.1.204.1A*
ISSUED: *02 - 04*

DRAWING **002** **GEARCHANGE**

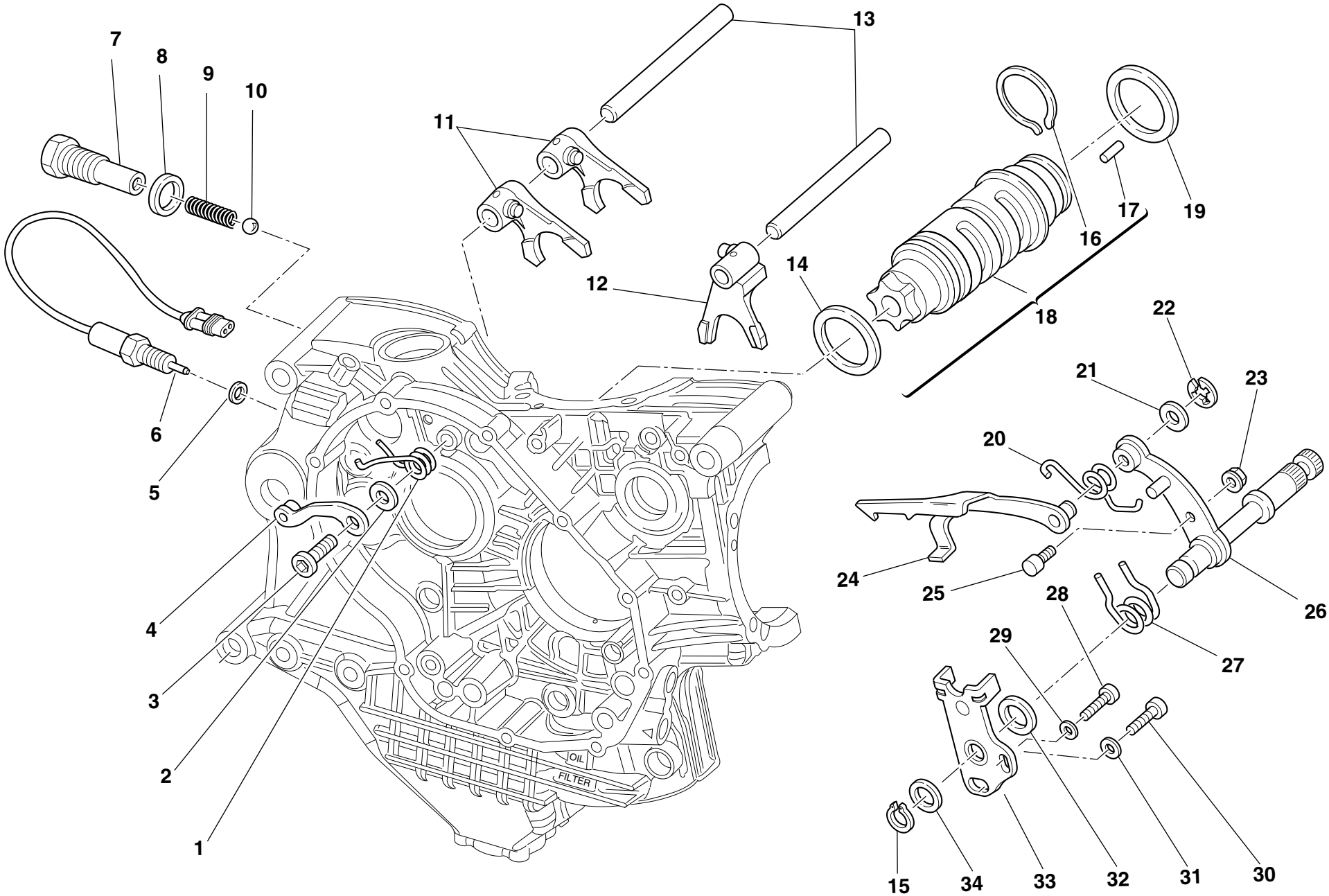

DRAWING **002** **GEARCHANGE**

NOTES	NO.	CODE NO.	DESCRIPTION	VALIDITY	Q.TY
	1	799.1.049.1A	Return spring		1
	2	852.1.053.2A	Washer		1
	3	779.1.039.1A	Special screw		1
	4	455.2.003.1A	Gear stopper assembly		1
	5	420.2.001.0A	Gasket th.1		1
	6	539.1.021.1A	Switch		1
	7	779.1.203.2A	Push rod holder		1
	8	0272.91.090	Gasket		1
	9	0660.13.143	Gear selector spring		1
	10	76835.1134	Ball		1
	11	180.1.001.1A	1st,4th-2nd,3rd gear selector fork		2
	12	180.1.002.1A	5th,6th gear selector fork		1
	13	0660.13.070	Fork pin		2
	14	852.1.005.1A	Shim th. 1		1
	15	73500.1542	Circlip		1
	16	882.1.006.1A	Needle retaining ring (square cross-section)		1
	17	821.1.070.1A	Special roller (square cross-section)		6
	18	182.2.018.1A	Complete gearbox drum		1
	19	0660.13.060	Shim th. 1		1
	19	852.1.094.1A	Shim th. 0.9		1
	20	799.1.025.1A	Fork return spring		1
	21	0400.09.050	Shim th. 0.5		1
	21	0765.92.205	Shim th. 0.2		2
	22	0214.07.350	Ring		1
	23	748.1.040.1A	Nut		1
	24	180.1.008.1A	Gearbox drum control fork		1
	25	0660.13.165	Gearchange lever pin		1

NOTES	NO.	CODE NO.	DESCRIPTION	VALIDITY	Q.TY
	26	821.1.001.1A	Pin with gearchange lever		1
	27	0799.13.110	Gearchange lever return spring		1
	28	771.5.067.8B	Screw		1
	29	852.1.172.1A	Washer		1
	30	771.5.123.8B	Screw		1
	31	852.1.174.1A	Washer		1
	32	881.1.012.1A	Centering ring		1
	33	826.1.009.1A	Stopper plate		1
	34	0400.29.125	Shim th. 0.2		2
	34	0400.29.126	Shim th. 0.5		1

CATALOGUE No: *915.1.204.1A*
ISSUED: *02 - 04*

DRAWING **003** **GEAR-BOX**

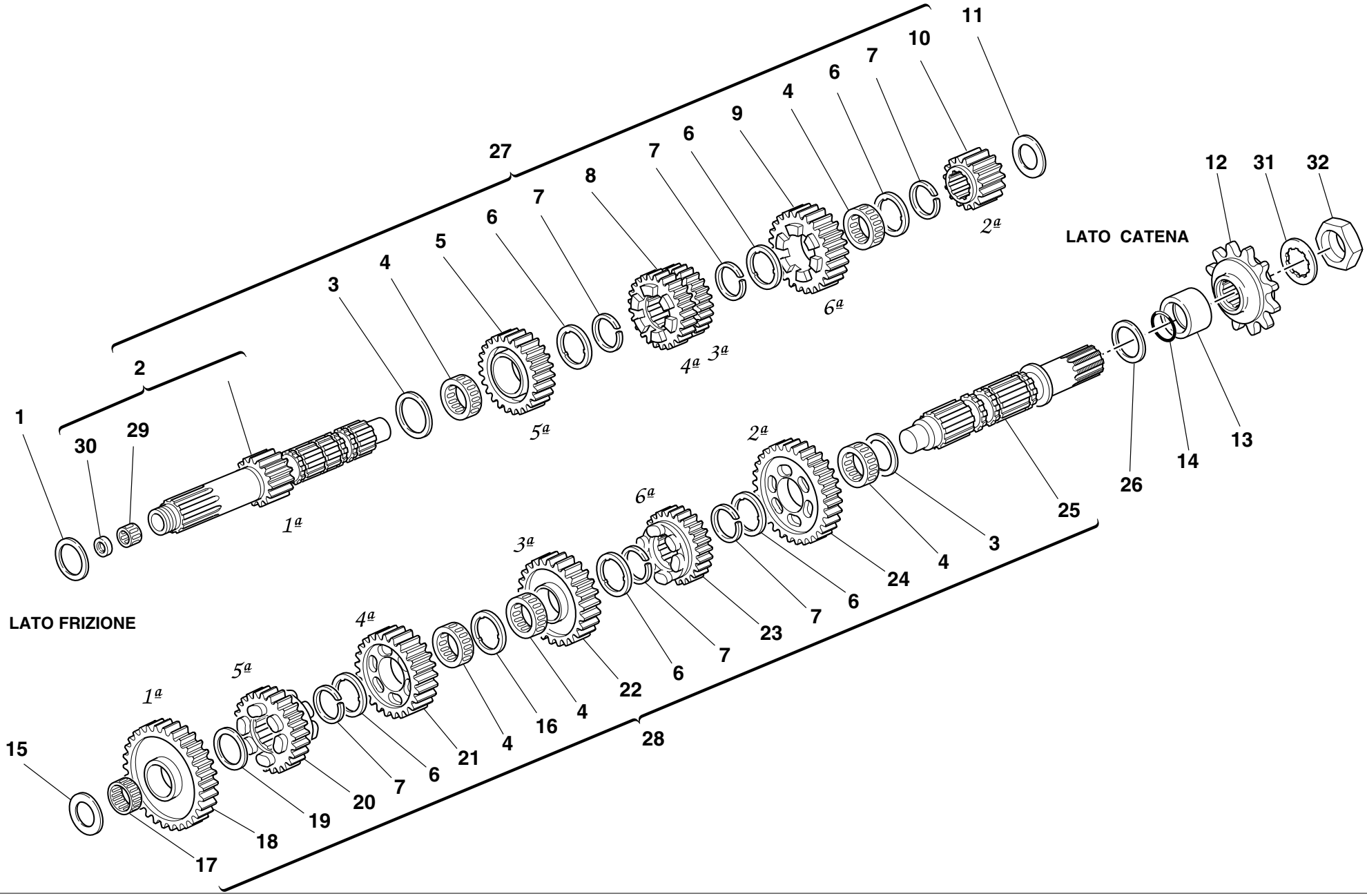

DRAWING **003** **GEAR-BOX**

NOTES	NO.	CODE NO.	DESCRIPTION	VALIDITY	Q.TY
	1	0251.47.050	Shim th. 1		1
	1	0251.47.054	Shim th. 1.2		1
	2	150.2.006.1B	Gearbox main shaft		1
	3	0670.16.150	Shim th. 0.5		2
	4	701.4.005.1A	Needle bearing		5
	5	172.1.004.2C	Driving gear 5th sp.		1
	6	856.1.001.1A	Grooved washer th. 0.5		6
	7	0670.16.145	Snap ring		6
	8	172.1.003.2C	Driving gear 3rd/4th sp.		1
	9	172.1.005.2C	Driving gear 6th sp.		1
	10	172.1.002.1B	Driving gear 2nd sp.		1
	11	0670.16.163	Shim th. 1.8		1
	11	0670.16.164	Shim th. 2		1
	11	713.1.014.1A	Shim th. 1.5		1
	11	713.1.014.1B	Shim th. 1.7		1
	11	713.1.014.1E	Shim th. 1.6		1
	11	713.1.014.1F	Shim th. 1.9		1
	12	449.1.045.1A	Front sprocket w/rubber protection Z=15		1
	13	713.1.157.1A	Spacer		1
	14	930.4.023.1A	O-ring		1
	15	0670.16.165	Shim th. 2.2		1
	15	0670.16.184	Shim th. 1		1
	15	0670.16.185	Shim th. 1.2		1
	15	713.1.011.1A	Shim th. 2.3		1
	16	856.1.031.1A	Grooved washer th. 0.5		1
	17	76402.0002	Needle bearing		1
	18	172.1.006.1B	Driven gear 1st sp.		1

NOTES	NO.	CODE NO.	DESCRIPTION	VALIDITY	Q.TY
	19	0670.16.155	Shim th. 1		1
	20	172.1.010.2C	Driven gear 5th sp.		1
	21	172.1.009.2C	Driven gear 4th sp.		1
	22	172.1.008.1C	Driven gear 3rd sp.		1
	23	172.1.011.2C	Driven gear 6th sp.		1
	24	172.1.007.1B	Driven gear 2nd sp.		1
	25	149.1.032.3A	Gearbox lay shaft		1
	26	0670.16.170	Shim th. 0.8		1
	26	0670.16.171	Shim th. 1		1
	26	852.1.105.1AB	Shim th. 0.9		1
	26	852.1.105.1AG	Shim th. 0.7		1
	27	150.2.047.1B	Complete main shaft		1
	28	150.2.053.2B	Complete lay shaft		1
	29	76270.0827	Needle bearing		1
	30	930.4.049.1A	Seal ring		1
	31	851.1.004.1A	Lock washer		1
	32	750.1.007.1A	Nut		1

CATALOGUE No: *915.1.204.1A*
ISSUED: *02 - 04*

DRAWING **004** **CLUTCH**

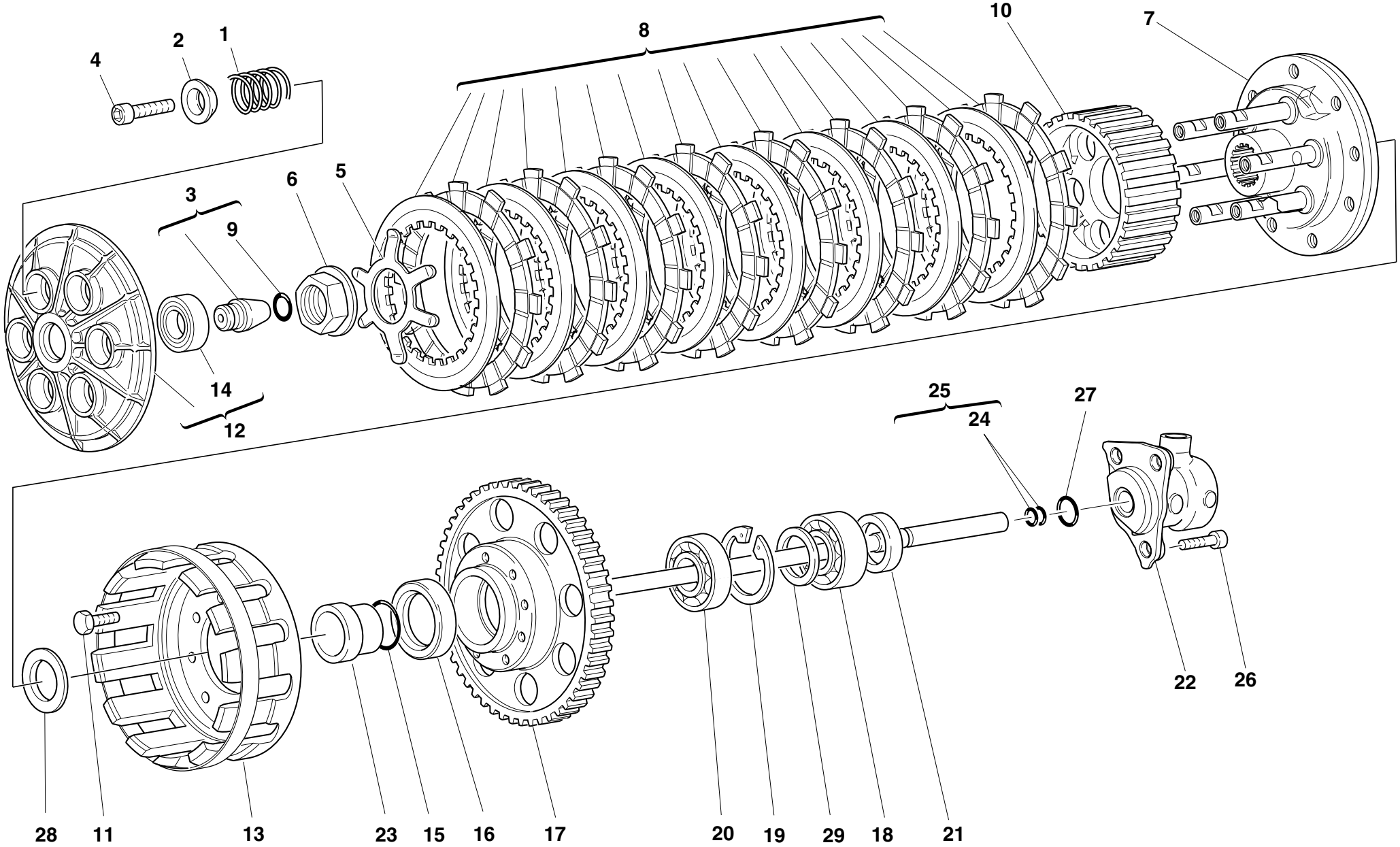

DRAWING **004** **CLUTCH**

NOTES	NO.	CODE NO.	DESCRIPTION	VALIDITY	Q.TY
	1	0659.16.558	Clutch spring		6
	2	841.1.002.2A	Retainer		6
	3	818.2.011.1A	Clutch control pin		1
	4	771.5.043.8B	Screw		6
	5	799.1.066.1B	Clutch spring		1
	6	750.1.050.1A	Nut		1
	7	160.2.038.1D	Flange		1
	8	190.2.012.1A	Clutch plates set		1
	9	0400.17.030	O-ring		1
	10	196.1.014.1C	Clutch drum		1
	11	70610.8120	Screw		8
	12	194.2.014.1A	Pressure plate assembly		1
	13	198.1.029.1A	Clutch housing		1
	14	702.5.016.1A	Bearing		1
	15	463.2.053.7A	O-ring		1
	16	930.4.035.1A	Seal ring		1
	17	170.2.090.1A	Clutch/crankshaft gears pair (27/57)		1
	18	75113.2566	Bearing		1
	19	0660.88.628	Circlip		1
	20	702.4.017.1A	Bearing		1
	21	0660.16.145	Spacer		1
	22	195.4.003.1A	Piston assembly		1
	23	713.1.095.1A	Spacer		1
	24	93823.2018	O-ring		2
	25	117.2.043.2A	Clutch control rod		1
	26	60N107335	Screw		3
	27	0647.92.170	O-ring		1

NOTES	NO.	CODE NO.	DESCRIPTION	VALIDITY	Q.TY
	28	799.1.051.2A	Spring washer		1
	29	713.1.070.1A	Spacer		1

CATALOGUE No: *915.1.204.1A*
ISSUED: *02 - 04*

DRAWING **005** **CLUTCH COVER**

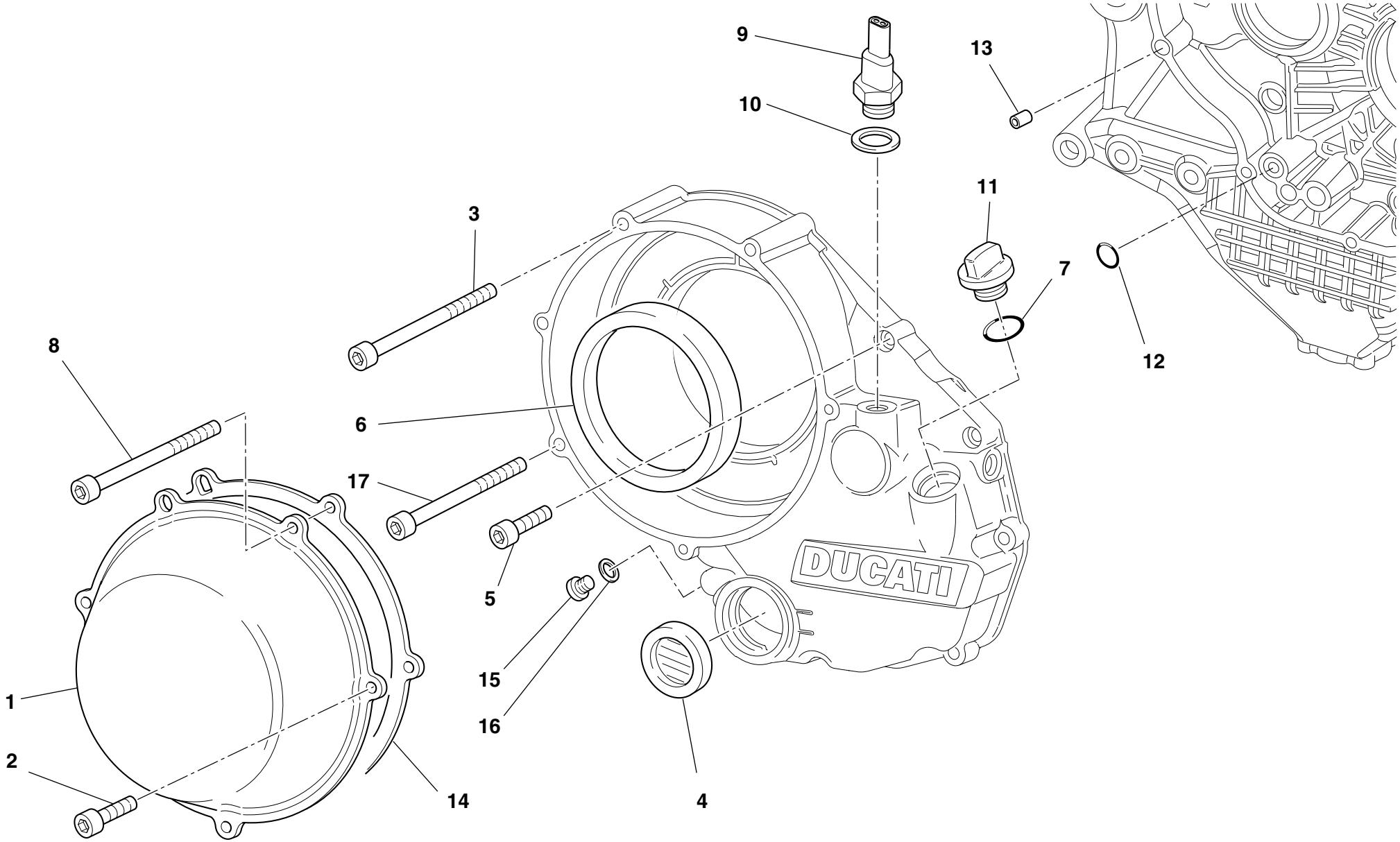

DRAWING **005** **CLUTCH COVER**

NOTES	NO.	CODE NO.	DESCRIPTION	VALIDITY	Q.TY
	1	243.1.025.1AD	Clutch protection cover		1
	2	771.1.026.1A	Screw		2
	3	771.5.078.8B	Screw		1
	4	254.4.001.1A	Oil level sight glass		1
	5	771.5.069.8B	Screw		6
	6	930.4.034.1A	Ring		1
	7	93823.2082	O-ring		1
	8	771.1.027.1A	Screw		2
	9	539.4.030.1A	Switch		1
	10	852.1.195.1A	Gasket th.2		1
	11	893.1.005.1A	Cap		1
	12	93827.0114	O-ring		1
	13	0400.49.240	Locating bush		1
	14	788.1.052.1A	Clutch cover gasket		1
	15	780.5.001.1A	Cap		1
	16	420.2.001.0A	Gasket th.1		1
	17	771.5.079.8B	Screw		1

NOTES	NO.	CODE NO.	DESCRIPTION	VALIDITY	Q.TY

CATALOGUE No: *915.1.204.1A*
ISSUED: *02 - 04*

DRAWING **005a** **CLUTCH COVER**

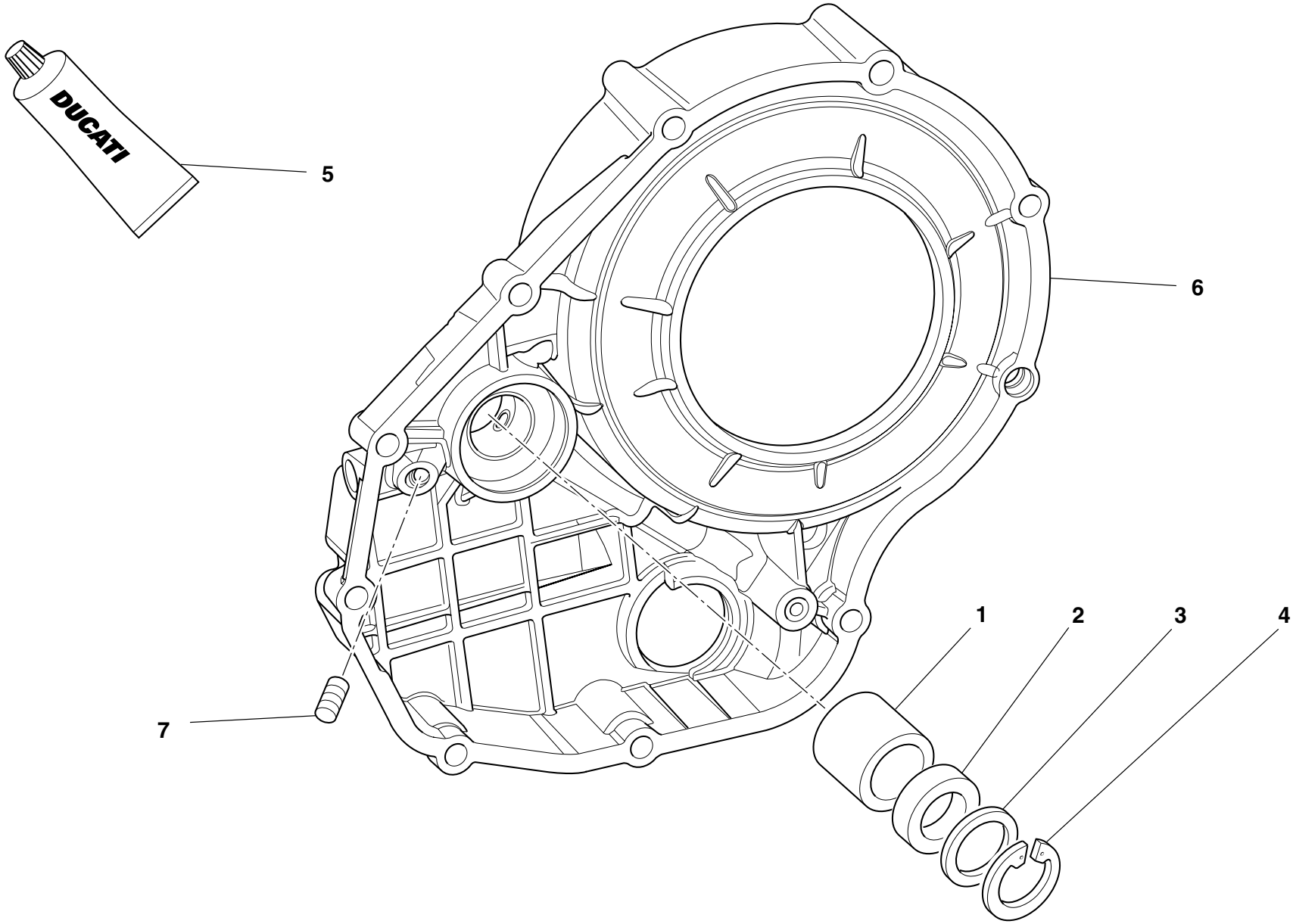

DRAWING **005a** **CLUTCH COVER**

NOTES	NO.	CODE NO.	DESCRIPTION	VALIDITY	Q.TY
	1	0665.49.680	Bush		1
	2	930.4.021.1A	Seal ring		1
	3	852.1.135.1A	Shim th. 1		1
	4	884.5.013.1A	Circlip		1
	5	94247.0014	Fluid sealant		1
	6	243.2.038.3A	Cover clutch side		1
	7	417.6.011.3A	Threaded dowel		1

NOTES	NO.	CODE NO.	DESCRIPTION	VALIDITY	Q.TY

CATALOGUE No: *915.1.204.1A*
ISSUED: *02 - 04*

DRAWING **006** **CRANKSHAFT**

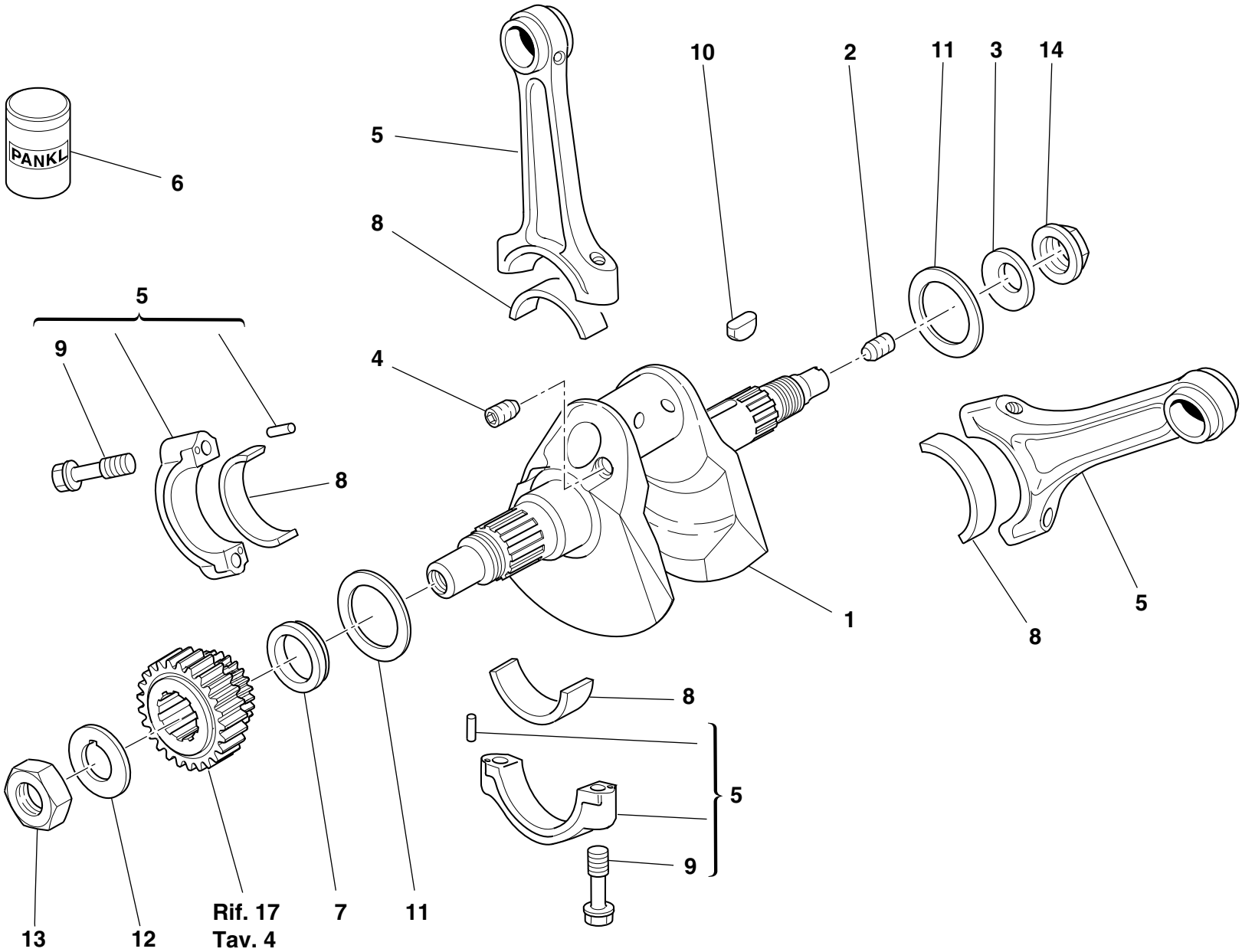

DRAWING **006** **CRANKSHAFT**

NOTES	NO.	CODE NO.	DESCRIPTION	VALIDITY	Q.TY
	1	146.2.115.1A	Crankshaft		1
	2	779.1.109.1A	Special screw		1
	3	799.1.051.2A	Spring washer		1
	4	72121.2106	Threaded dowel		1
	5	156.2.040.1A	Complete connecting rod		1
	6	94460.1829	Grease		1
	7	710.1.061.1A	Spacer		1
	8	112.1.012.1AA	Half-bearing (RED)		2
	8	112.1.012.1AB	Half-bearing (BLUE)		2
	9	779.1.114.1A	Special screw		4
	10	0755.29.025	Woodruff key		1
	11	852.1.104.1A	Shim th. 1.9		2
	11	852.1.104.1B	Shim th. 1.95		2
	11	852.1.104.1C	Shim th. 2		2
	11	852.1.104.1D	Shim th. 2,05		2
	11	852.1.104.1E	Shim th. 2,1		2
	11	852.1.104.1F	Shim th. 2,15		2
	11	852.1.104.1G	Shim th. 2.2		2
	11	852.1.104.1H	Shim th. 2.25		2
	11	852.1.104.1I	Shim th. 2.3		2
	11	852.1.104.1J	Shim th. 2.35		2
	11	852.1.104.1K	Shim th. 2,4		2
	11	852.1.104.1L	Shim th. 2,45		2
	11	852.1.104.1M	Shim th. 2.5		2
	11	852.1.104.1N	Shim th. 2.55		2
	12	851.1.010.1A	Lock washer		1
	13	750.1.057.1A	Nut		1

NOTES	NO.	CODE NO.	DESCRIPTION	VALIDITY	Q.TY
	14	750.1.012.2A	Nut		1

CATALOGUE No: *915.1.204.1A*
ISSUED: *02 - 04*

DRAWING **007** **CYLINDERS - PISTONS**

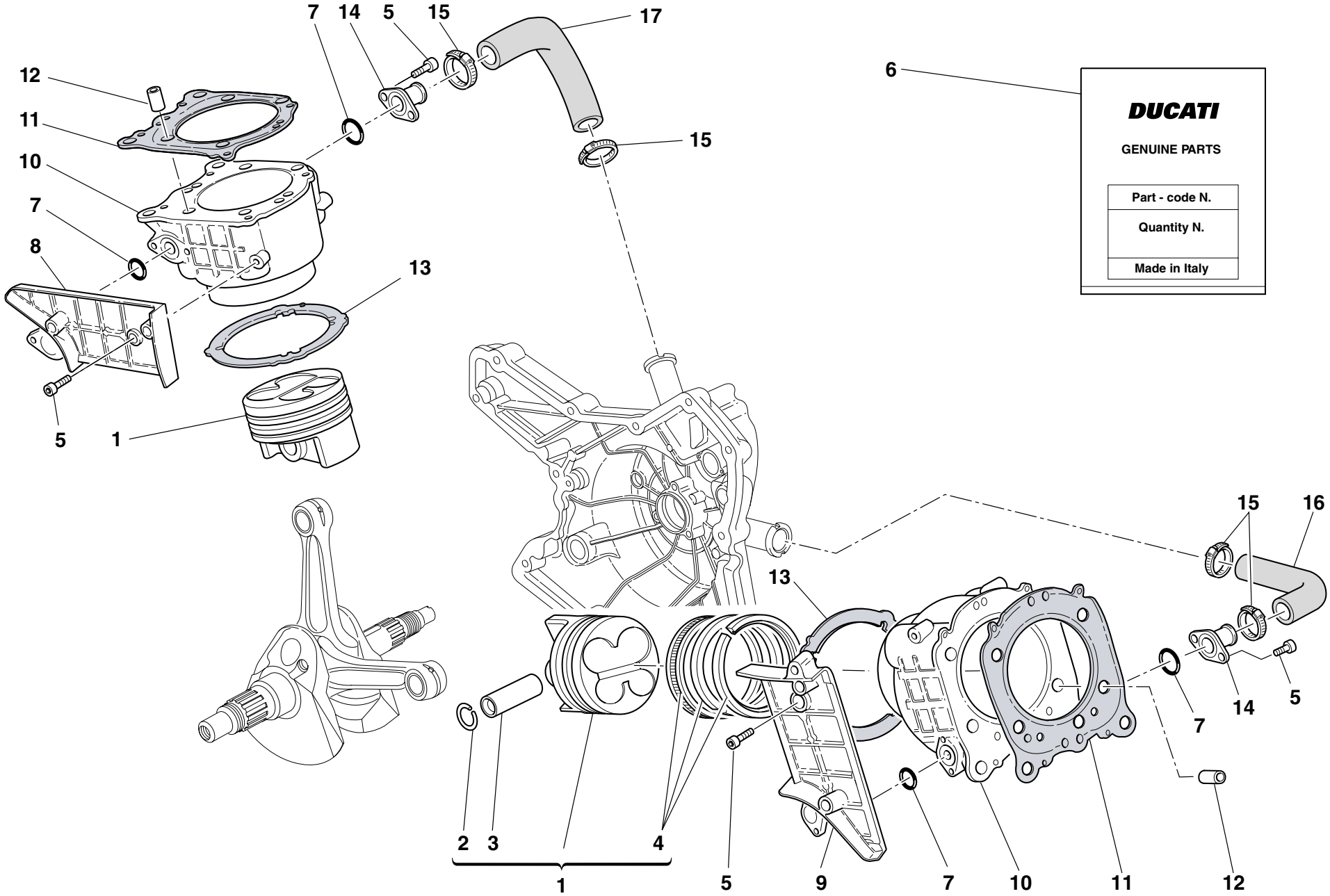

DRAWING **007** **CYLINDERS - PISTONS**

NOTES	NO.	CODE NO.	DESCRIPTION	VALIDITY	Q.TY
	1	122.2.117.1B	Complete piston ø90		2
	2	121.1.183.1A	Piston pin circlip		4
	3	121.1.078.1B	Piston pin		2
	4	121.2.038.1B	Piston rings set		2
	5	771.5.065.8B	Screw		10
	6	791.2.037.1A	Gaskets set		1
	7	886.5.011.1A	O-Ring		4
	8	247.1.120.1A	Cover		1
	9	247.1.155.1A	Cover		1
	10	120.2.094.1A	Cylinder-piston fit		2
	11	786.1.075.1A	Head-cylinder gasket		2
	12	711.1.093.2A	Bush		4
	13	786.1.056.1A	Cylinder-crankcase gasket th. 0.4		2
	14	814.1.081.1A	Water inlet union to cylinders		2
	15	741.4.002.1A	Hose guide		4
	16	800.1.123.1A	Horizontal cylinder water inlet hose		1
	17	800.1.122.1A	Vertical cylinder water inlet hose		1

NOTES	NO.	CODE NO.	DESCRIPTION	VALIDITY	Q.TY

CATALOGUE No: *915.1.204.1A*
ISSUED: *02 - 04*

DRAWING **008** **TIMING**

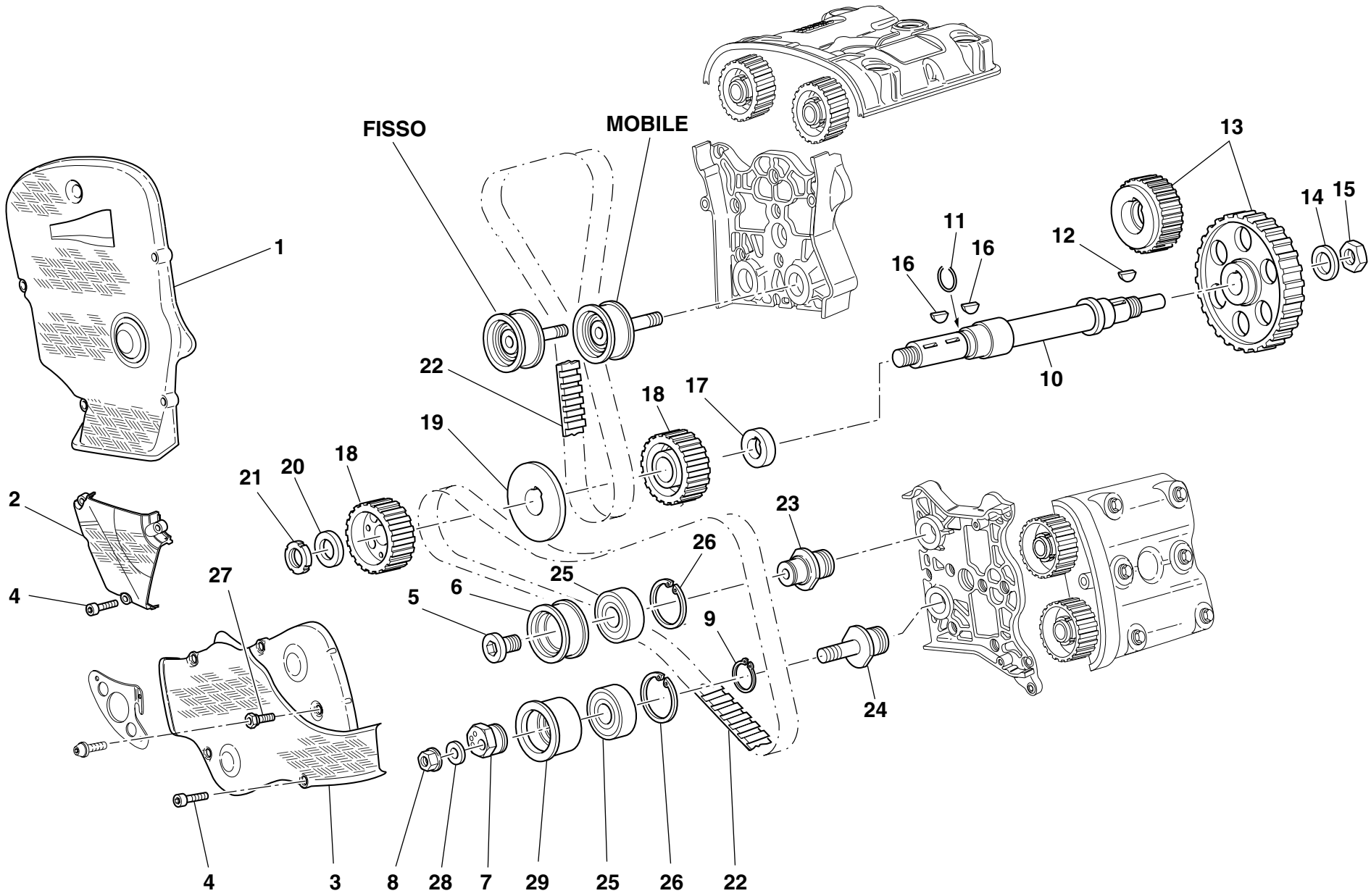

DRAWING **008** **TIMING**

NOTES	NO.	CODE NO.	DESCRIPTION	VALIDITY	Q.TY
	1	245.1.066.1A	Vertical timing belt cover (CARBON)		1
	2	245.1.067.1A	Outer central cover (CARBON)		1
	3	245.1.065.1A	Horizontal belt outer cover (CARBON)		1
	4	773.5.069.8B	Screw		11
	5	779.1.187.1A	Setscrew		2
	6	451.1.018.2A	Bush		2
	7	451.1.043.1A	Tensioner eccentric		2
	8	748.1.044.1A	Nut		2
	9	73500.2054	Snap ring		2
	10	147.1.014.1A	Timing lay shaft		1
	11	882.1.003.1A	Snap ring		1
	12	0755.29.025	Woodruff key		1
	13	171.2.062.1A	Timing gears pair		1
	14	851.1.013.1A	Lock washer		1
	15	0124.40.060	Hexagon nut		1
	16	74172.1008	Woodruff key		2
	17	716.1.073.2A	Spacer		1
	18	255.1.010.2B	Timing belt roller		2
	19	856.1.062.2A	Belt roller separating washer		1
	20	716.1.072.2A	Spacer		1
	21	72944.1542	Elastic-stop ring nut		1
	22	737.4.012.4A	Timing drive toothed belt		2
	23	451.1.017.1A	Fixed tensioner roller pin		2
	24	451.1.044.1A	Movable tensioner roller pin		2
	25	702.4.058.1A	Bearing		4
	26	7350.33.804	Circlip		4
	27	684.1.054.1A	Stud bolt		2
	28	853.1.002.1A	Spring washer		2
	29	451.1.042.1A	Movable tensioner roller bush		2

CATALOGUE No: *915.1.204.1A*
ISSUED: *02 - 04*

DRAWING **009** **FILTERS AND OIL PUMP**

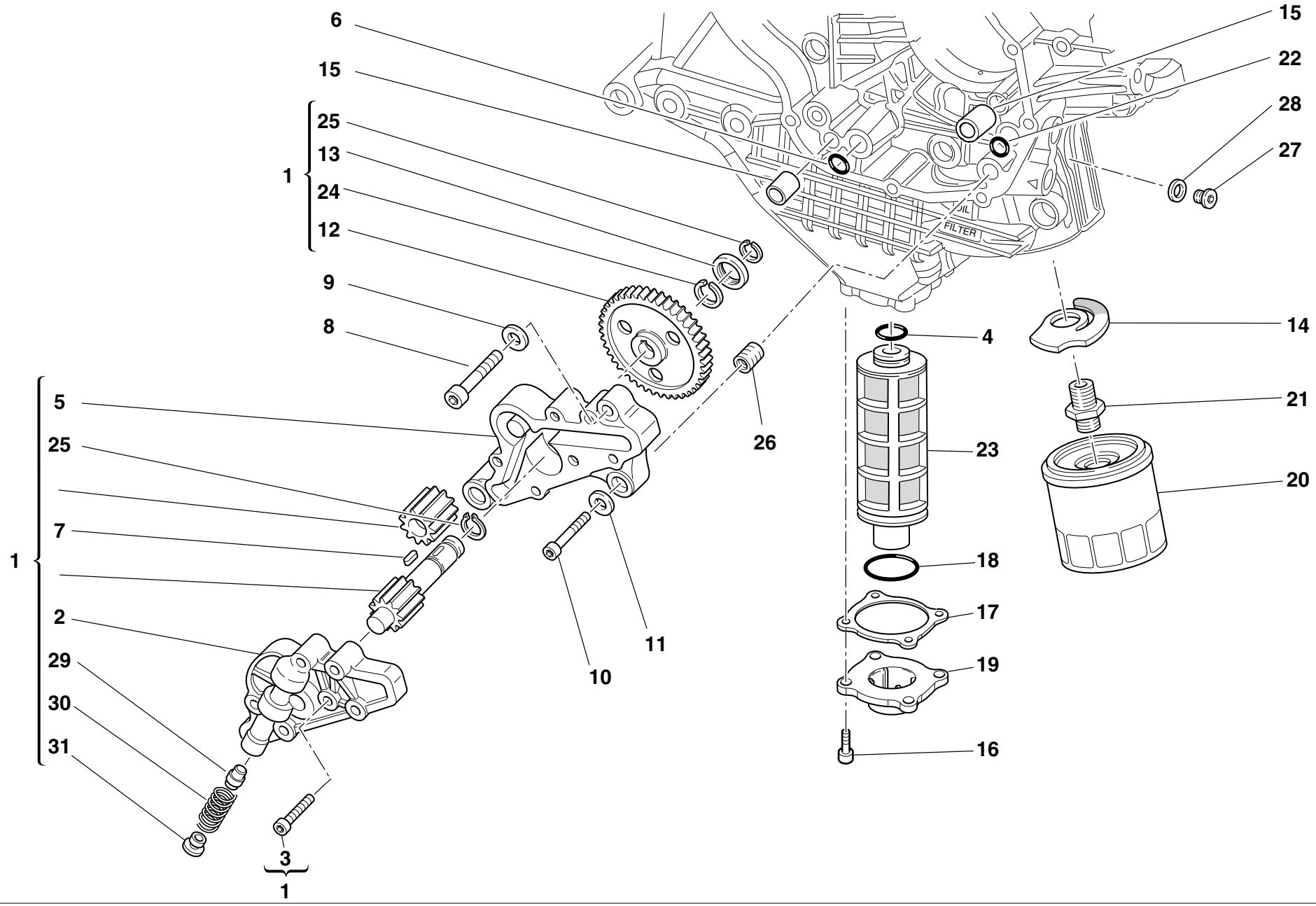

DRAWING **009** **FILTERS AND OIL PUMP**

NOTES	NO.	CODE NO.	DESCRIPTION	VALIDITY	Q.TY
	1	174.2.025.5A	Complete oil pump		1
	2	247.1.174.1A	Pump cover		1
	3	773.5.069.8B	Screw		6
	4	886.4.033.1A	O-ring		1
	5	250.1.038.1A	Pump body		1
	6	886.4.037.1A	O-ring		1
	7	680.1.001.1B	Woodruff key		1
	8	771.5.129.8B	Screw		2
	9	853.1.002.1A	Spring washer		2
	10	771.5.069.8B	Screw		1
	11	853.1.004.1A	Spring washer		1
	12	174.1.025.1A	Pump drive gear		1
	13	710.1.001.1A	Bush		1
	14	799.2.077.2A	Bypass spring		1
	15	0759.49.280	Locating bush		2
	16	771.5.067.8B	Screw		4
	17	788.1.065.1A	Cover gasket		1
	18	886.4.034.1A	O-ring		1
	19	240.1.025.1A	Cover		1
	20	444.4.003.4A	Oil filter cartridge		1
	21	0670.49.910	Nipple		1
	22	93827.0114	O-ring		1
	23	894.1.014.1A	Oil net filter		1
	24	76267.0012	Snap ring		1
	25	73500.1237	Circlip		2
	26	0670.49.310	Reduction bush		1
	27	779.1.162.2A	Cap		1

NOTES	NO.	CODE NO.	DESCRIPTION	VALIDITY	Q.TY
	28	852.1.195.1A	Gasket th.2		1
	29	593.1.018.1A	Bypass valve		1
	30	799.1.055.1A	Bypass spring		1
	31	780.1.018.1A	Bypass cap		1

CATALOGUE No: *915.1.204.1A*
ISSUED: *02 - 04*

DRAWING **010** **HALF CRANKCASES**

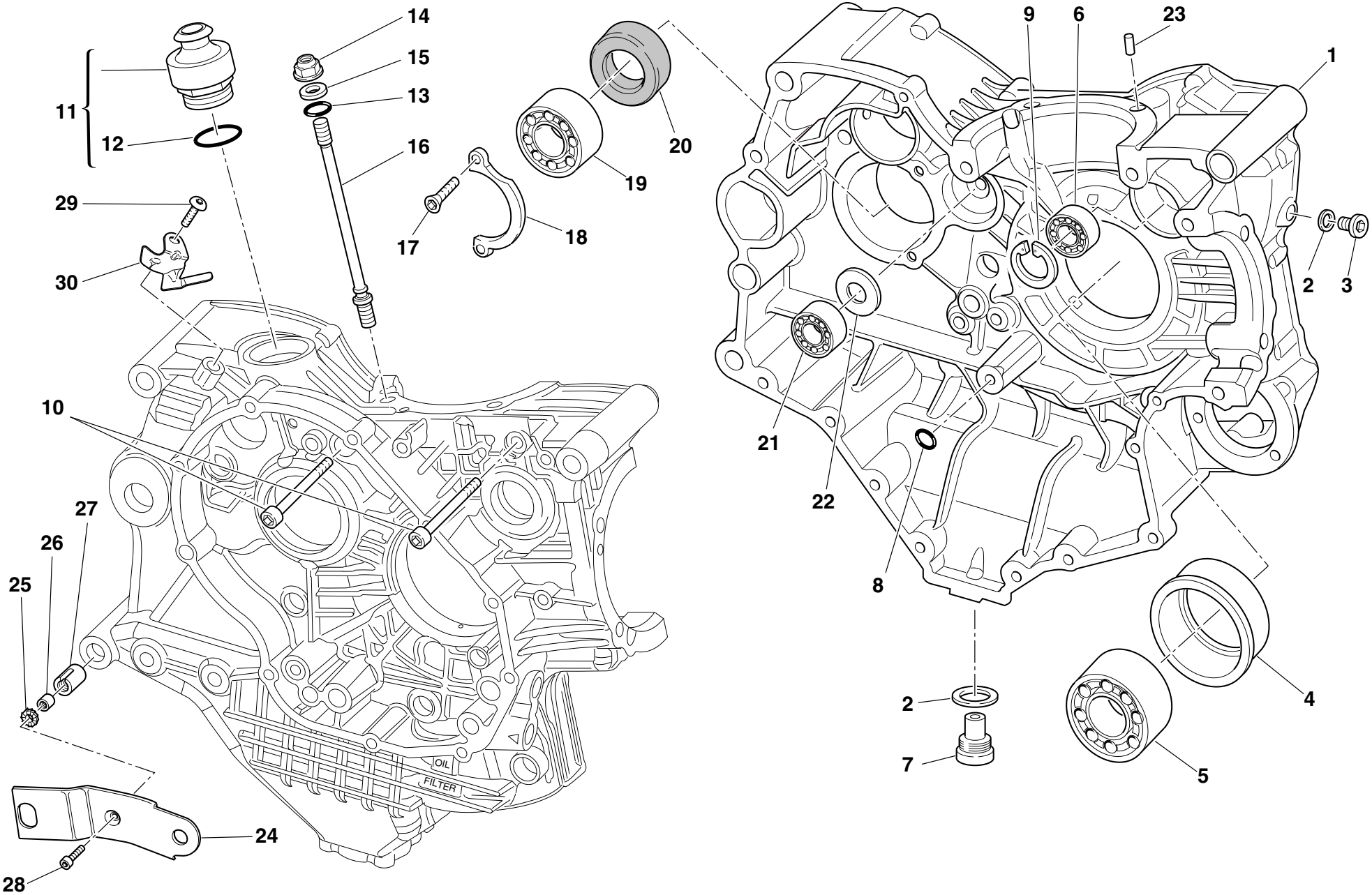

DRAWING **010** **HALF CRANKCASES**

NOTES	NO.	CODE NO.	DESCRIPTION	VALIDITY	Q.TY
	1	225.2.106.2A	Complete half-crankcases pair		1
	2	852.5.026.1A	Aluminium gasket th.1,5		2
	3	779.1.026.1A	Screw		1
	4	710.1.112.1A	Bearing holder bush		1
	5	75191.3380	Bearing		1
	6	702.5.008.1A	Bearing		1
	7	893.2.006.2A	Cap		1
	8	93827.0114	O-ring		1
	9	73503.3380	Circlip		1
	10	771.5.136.2B	Screw		2
	11	593.1.003.1B	Breather valve		1
	12	93823.3156	O-ring		1
	13	0400.17.030	O-ring		8
	14	748.1.038.1A	Nut		8
	15	856.1.064.2A	Special washer		8
	16	766.1.045.1A	Stud bolt for fastening head cylinder		8
	17	72094.1616	Screw		2
	18	826.1.012.1A	Keep plate		1
	19	702.4.013.1A	Bearing		1
	20	930.4.022.1A	Seal ring		1
	21	702.4.033.1A	Bearing		1
	22	0370.49.250	Washer		1
	23	0011.52.010	Locating dowel		2
	24	830.1.261.1A	R.H. bracket		1
	25	852.4.008.1A	Nylon washer		1
	26	710.1.032.1A	Bush		1
	27	711.1.072.1A	Bush		1

NOTES	NO.	CODE NO.	DESCRIPTION	VALIDITY	Q.TY
	28	771.5.669.8B	Screw		1
	29	775.1.062.2A	Special screw		1
	30	829.1.439.1A	Holder sensor		1

CATALOGUE No: *915.1.204.1A*
ISSUED: *02 - 04*

DRAWING **010a** **HALF CRANKCASES**

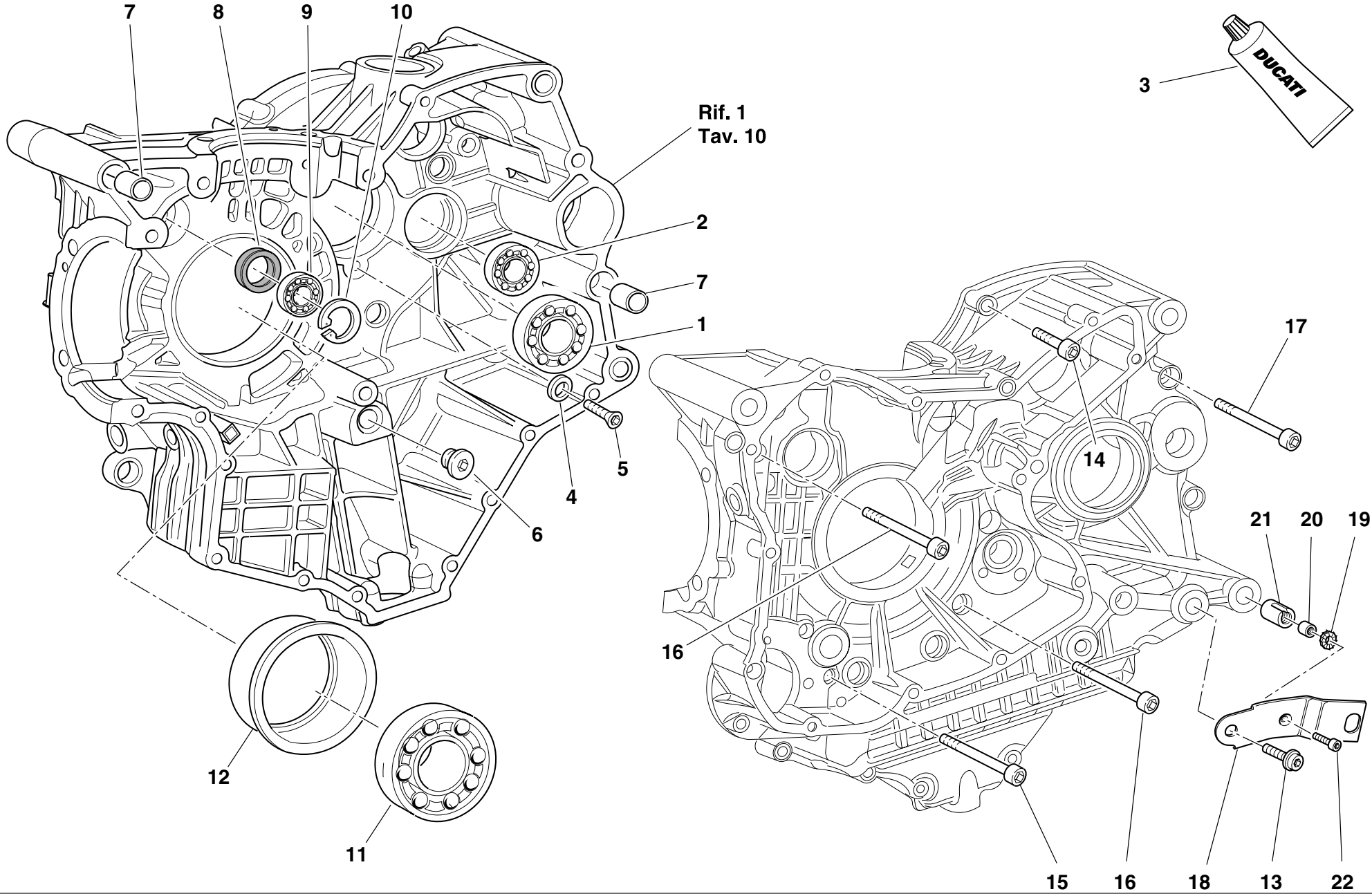

DRAWING **010a** **HALF CRANKCASES**

NOTES	NO.	CODE NO.	DESCRIPTION	VALIDITY	Q.TY
	1	702.5.019.1A	Bearing		1
	2	702.4.033.1A	Bearing		1
	3	94247.0014	Fluid sealant		1
	4	713.1.140.1A	Spacer		2
	5	770.5.250.8B	Screw		2
	6	780.1.005.1A	Cap		1
	7	711.1.095.1A	Bush		2
	8	93785.1830	Seal ring		1
	9	75794.1542	Bearing		1
	10	73503.3380	Circlip		1
	11	702.4.020.1A	Bearing		1
	12	710.1.111.1A	Bearing holder bush		1
	13	771.5.752.8B	Screw		1
	14	771.5.072.8B	Screw		8
	15	771.5.080.8B	Screw		2
	16	779.1.029.2A	Special screw		1
	17	771.5.136.8B	Screw		2
	18	830.1.262.1A	L.H. bracket		1
	19	852.4.008.1A	Nylon washer		1
	20	710.1.032.1A	Bush		1
	21	711.1.072.1A	Bush		1
	22	771.5.669.8B	Screw		1

NOTES	NO.	CODE NO.	DESCRIPTION	VALIDITY	Q.TY

CATALOGUE No: *915.1.204.1A*
ISSUED: *02 - 04*

DRAWING **011** **WATER PUMP - ALTERNATOR COVER**

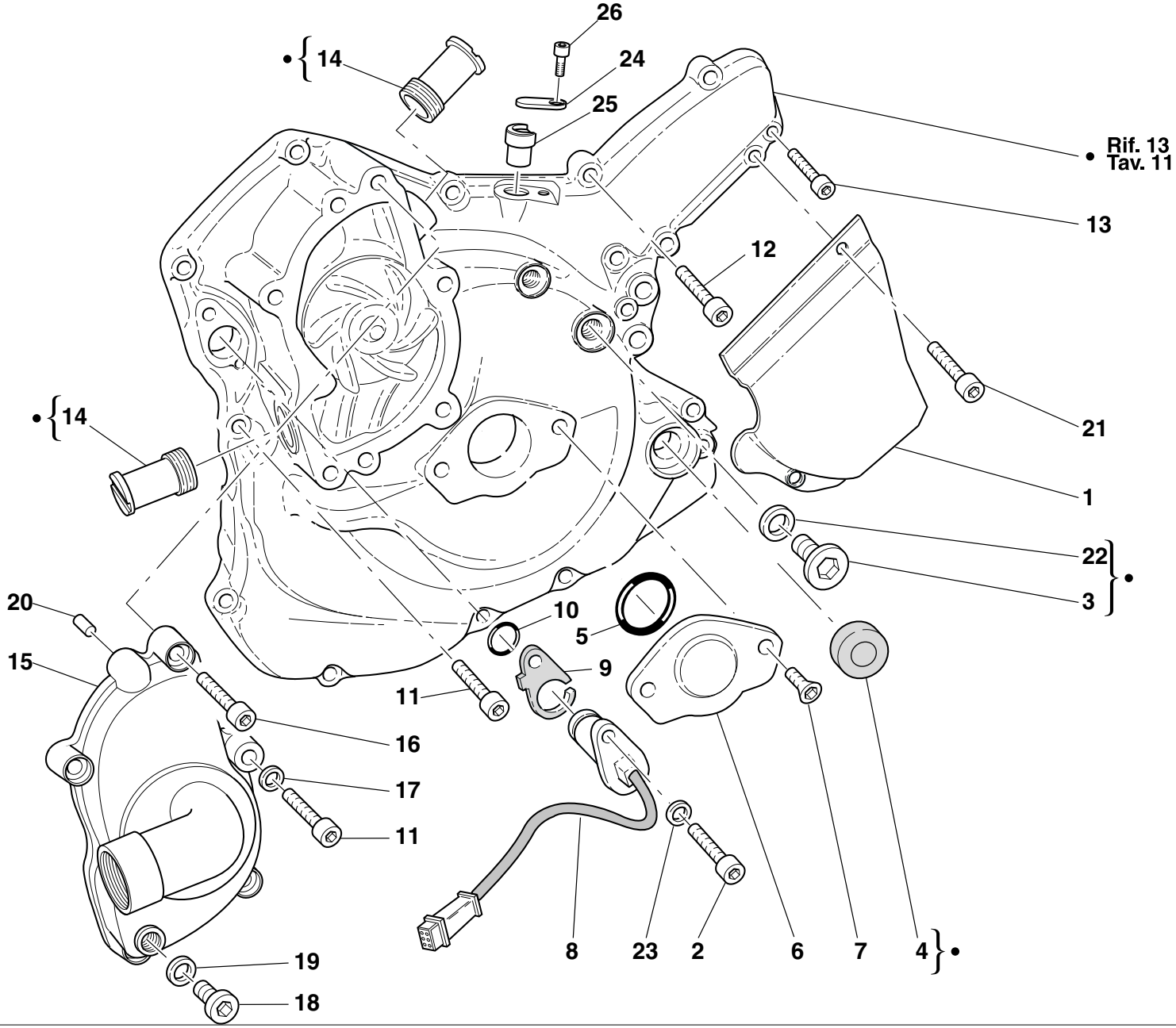

DRAWING **011** **WATER PUMP - ALTERNATOR COVER**

NOTES	NO.	CODE NO.	DESCRIPTION	VALIDITY	Q.TY
	1	247.1.083.1A	Chain cover (BLACK)		1
	2	771.5.064.8B	Screw		1
	3	779.1.198.2A	Cap		1
	4	93783.1524	Seal ring		1
	5	886.4.035.1A	O-ring		1
	6	247.1.002.1BC	Cover		1
	7	777.5.049.8B	Screw		2
	8	552.4.020.1A	Sensor		1
	9	788.1.076.1A	Gasket th.0,6		2
	9	788.1.076.1AA	Gasket th.0,8		1
	9	788.1.076.1AB	Gasket th.1,0		1
	10	886.4.003.1A	O-ring		1
	11	771.5.069.8B	Screw		10
	12	771.5.071.8B	Screw		3
	13	771.5.067.8B	Screw		2
	14	668.1.001.3A	Water pump delivery filler		2
	15	247.2.166.2A	Complete water pump cover		1
	16	771.5.066.8B	Screw		5
	17	420.2.000.7A	Gasket		1
	18	780.5.001.1A	Cap		1
	19	420.2.001.0A	Gasket th.1		1
	20	0011.52.010	Locating dowel		2
	21	771.5.065.2BB	Screw		2
	22	852.1.120.1A	Aluminium gasket		1
	23	853.1.003.1A	Spring washer		1
	24	826.1.019.1A	Plate		1
	25	821.1.209.1A	Pin		1

NOTES	NO.	CODE NO.	DESCRIPTION	VALIDITY	Q.TY
	26	779.1.026.1A	Screw		1

CATALOGUE No: *915.1.204.1A*
ISSUED: *02 - 04*

DRAWING **011a** **WATER PUMP - ALTERNATOR COVER**

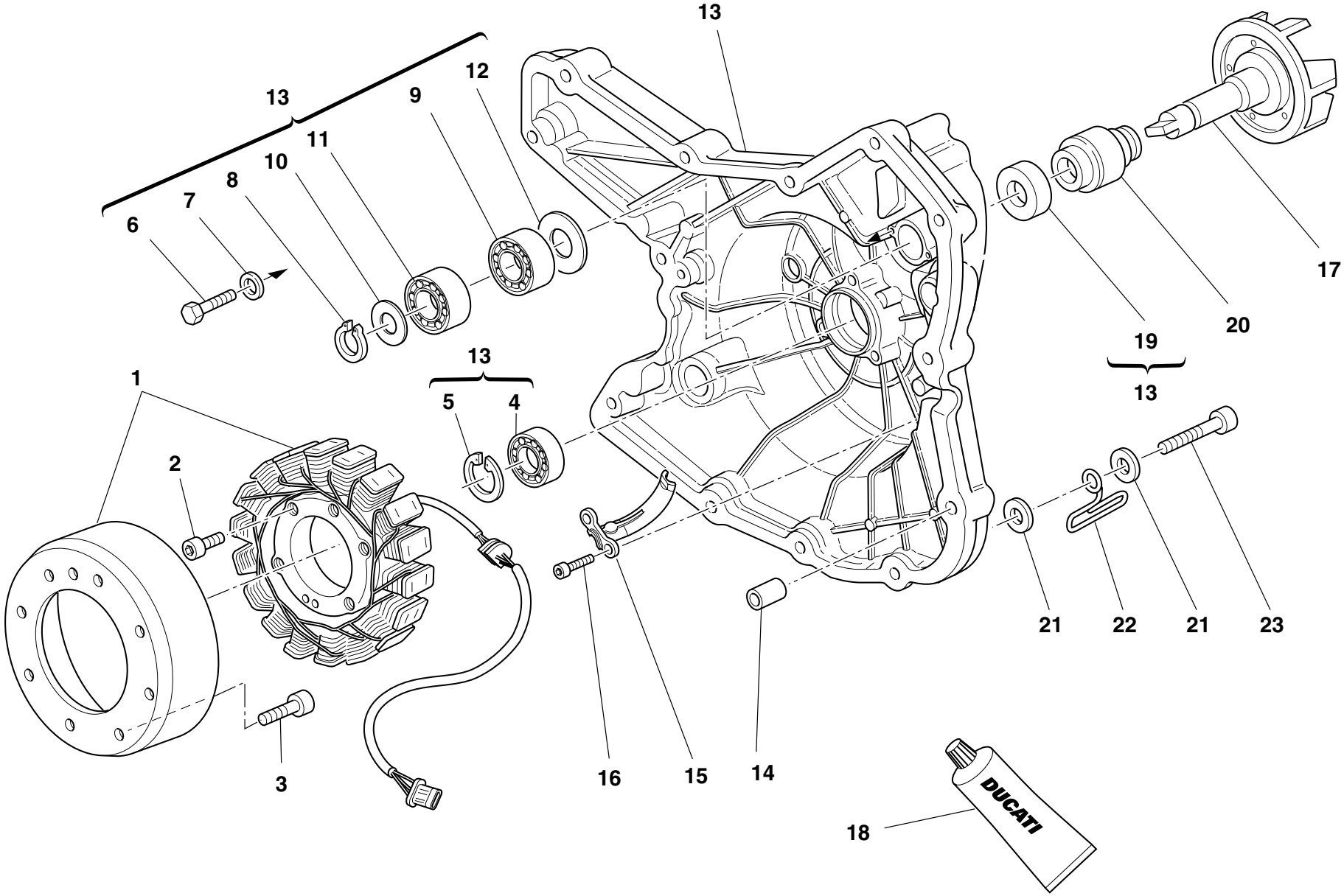

DRAWING **011a** **WATER PUMP - ALTERNATOR COVER**

NOTES	NO.	CODE NO.	DESCRIPTION	VALIDITY	Q.TY
	1	264.4.017.1A	Generator		1
	2	771.5.073.2B	Screw		3
	3	779.4.075.1A	Screw		8
	4	702.5.008.1A	Bearing		1
	5	73503.3380	Circlip		1
	6	770.5.250.8B	Screw		2
	7	852.1.172.1A	Washer		2
	8	884.5.011.1A	A 10 Ring		1
	9	702.4.010.2A	Bearing		1
	10	852.1.114.1A	Washer		1
	11	702.4.009.1A	Bearing		1
	12	713.1.128.1B	Spacer		1
	13	242.2.068.1A	Generator cover		1
	14	0400.49.240	Locating bush		2
	15	830.1.235.1A	Bracket		1
	16	771.5.064.8B	Screw		2
	17	251.2.008.1A	Water pump fan		1
	18	94247.0014	Fluid sealant		1
	19	930.5.005.1A	Seal		1
	20	930.5.006.2B	Mechanical seal		1
	21	734306N01	Washer		2
	22	881.1.030.1A	Holder		1
	23	60N102511	Screw		1

NOTES	NO.	CODE NO.	DESCRIPTION	VALIDITY	Q.TY

CATALOGUE No: *915.1.204.1A*
ISSUED: *02 - 04*

DRAWING **012** **ELECTRIC STARTER AND IGNITION**

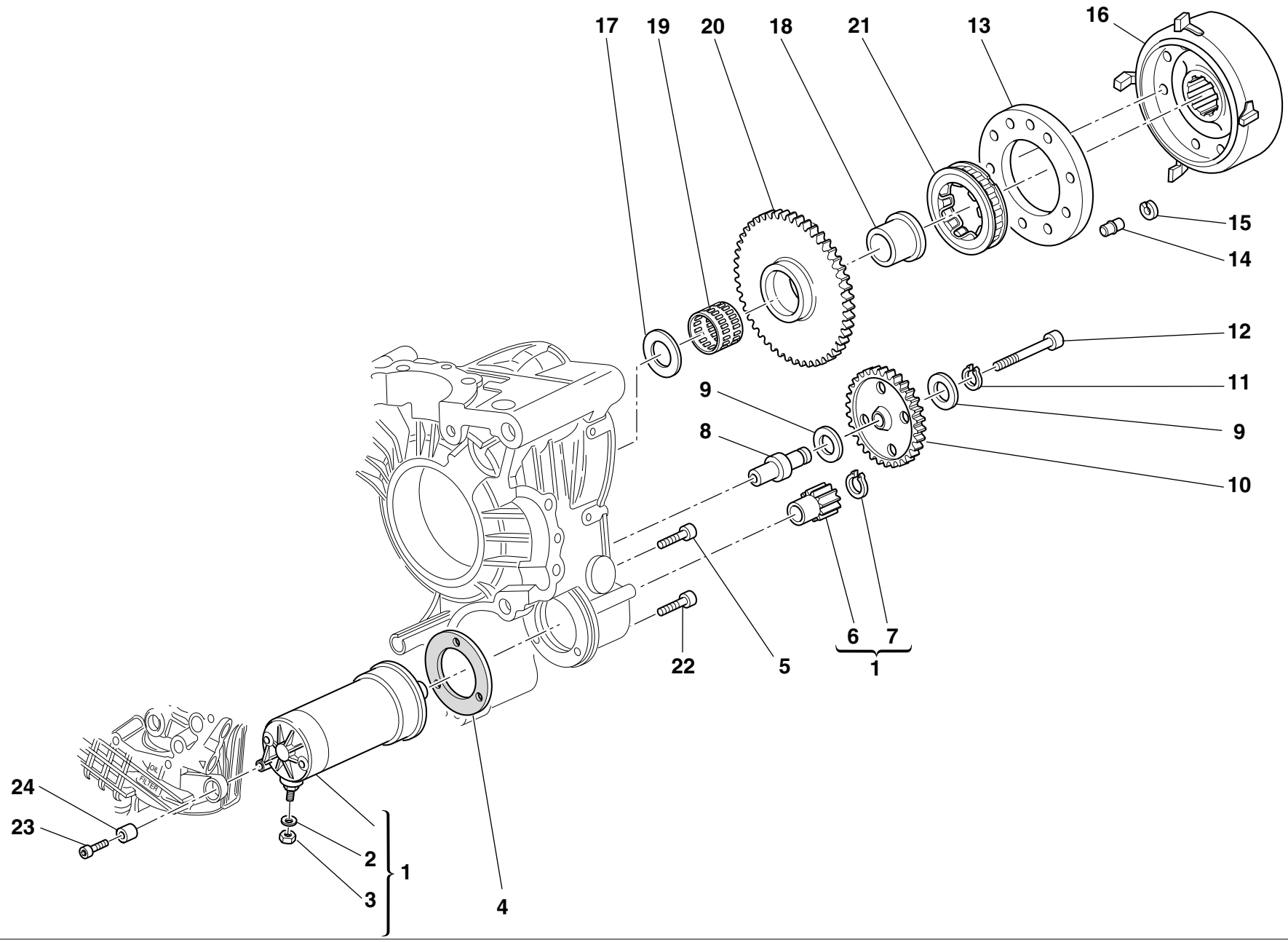

DRAWING **012** **ELECTRIC STARTER AND IGNITION**

NOTES	NO.	CODE NO.	DESCRIPTION	VALIDITY	Q.TY
	1	270.4.005.1A	Complete starter motor		1
	2	853.1.003.1A	Spring washer		1
	3	750.1.121.1A	Nut		1
	4	788.1.054.1A	Starter motor gasket		1
	5	771.5.066.8B	Screw		2
	6	176.1.001.1A	Starter motor sprocket		1
	7	73500.1237	Circlip		1
	8	0660.50.020	Intermediate gear pin		1
	9	856.1.071.1A	Washer		2
	10	176.1.009.1A	Intermediate gear assembly		1
	11	73500.1440	Circlip		1
	12	771.5.078.8B	Screw		1
	13	160.1.097.1A	Flange		1
	14	863.1.002.1A	Locating pin		1
	15	0647.29.040	Check ring		1
	16	276.1.041.1A	Ignition flywheel		1
	17	856.1.075.1A	Shim		1
	18	881.1.034.1A	Inner ring		1
	19	702.4.018.1A	Needle bearing		1
	20	173.1.013.1A	Electric starter driven gear		1
	21	701.4.008.1A	Starter clutch		1
	22	771.5.069.8B	Screw		1
	23	771.5.071.8B	Screw		1
	24	700.1.036.1A	Threaded insert		1

NOTES	NO.	CODE NO.	DESCRIPTION	VALIDITY	Q.TY

CATALOGUE No: *915.1.204.1A*
ISSUED: *02 - 04*

DRAWING **013** **HEAD: TIMING**

11 Registro bilanc. apertura Adjustment Réglage Ventilkäppchen	9 Registro bilanc. chiusura Adjustment Réglage Ventilkäppchen
840.1.185.1AM — 1,8	840.1.186.1AP — 4,15
840.1.185.1AN — 1,85	840.1.186.1AQ — 4,2
840.1.185.1AO — 1,9	840.1.186.1AR — 4,25
840.1.185.1AP — 1,95	840.1.186.1AS — 4,3
840.1.185.1AQ — 2	840.1.186.1AT — 4,35
840.1.185.1AR — 2,05	840.1.186.1AU — 4,4
840.1.185.1AS — 2,1	840.1.186.1AA — 4,45
840.1.185.1AT — 2,15	840.1.186.1AB — 4,5
840.1.185.1AU — 2,2	840.1.186.1AC — 4,55
840.1.185.1AA — 2,25	840.1.186.1AD — 4,6
840.1.185.1AB — 2,3	840.1.186.1AE — 4,65
840.1.185.1AC — 2,35	840.1.186.1AF — 4,7
840.1.185.1AD — 2,4	840.1.186.1AG — 4,75
840.1.185.1AE — 2,45	840.1.186.1AH — 4,8
840.1.185.1AF — 2,5	840.1.186.1AI — 4,85
840.1.185.1AG — 2,55	840.1.186.1AJ — 4,9
840.1.185.1AH — 2,6	840.1.186.1AK — 4,95
840.1.185.1AI — 2,65	840.1.186.1AL — 5
840.1.185.1AJ — 2,7	840.1.186.1AM — 5,05
840.1.185.1AK — 2,75	840.1.186.1AN — 5,1
840.1.185.1AL — 2,8	840.1.186.1AO — 5,15

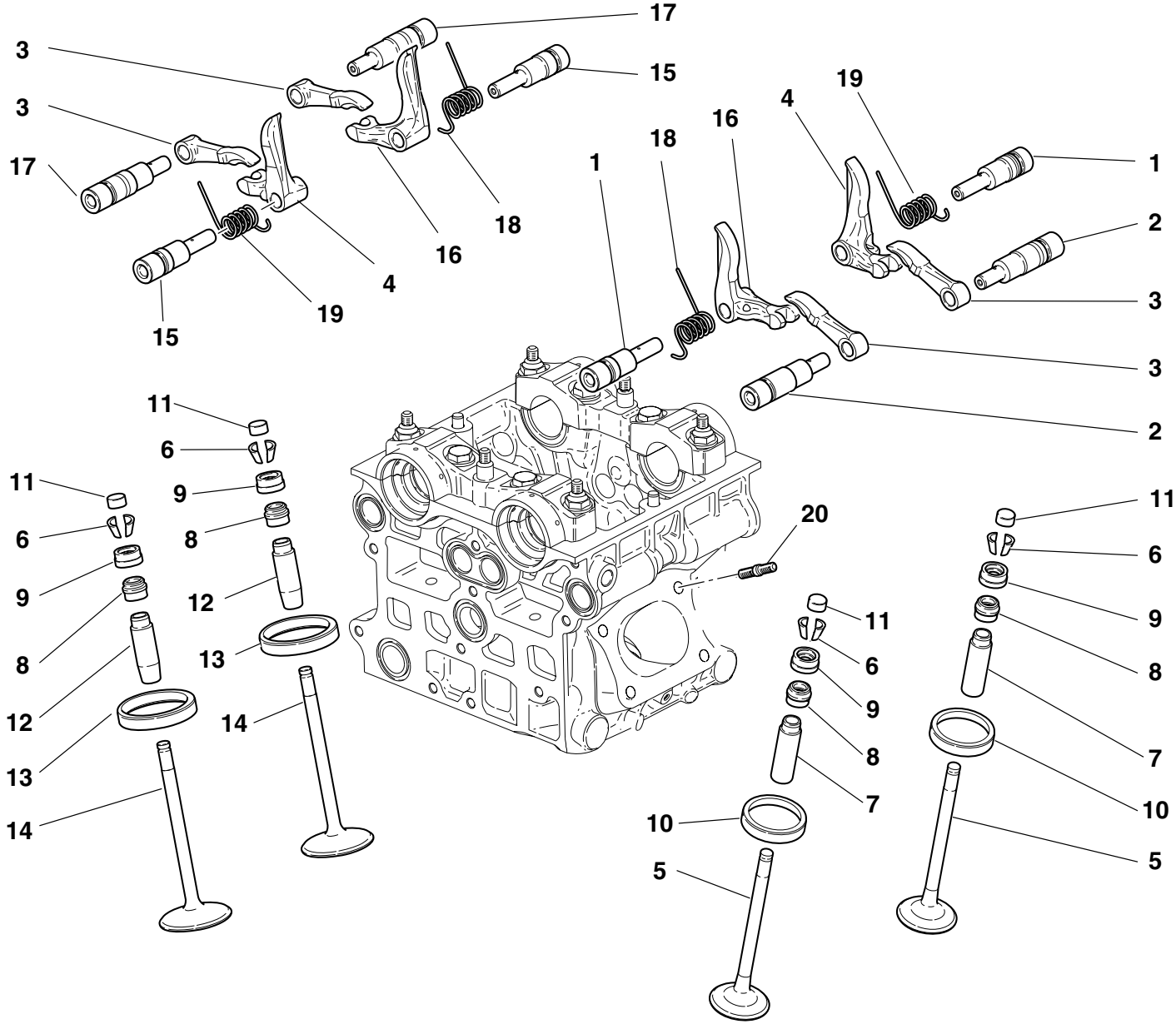

DRAWING **013** **HEAD: TIMING**

NOTES	NO.	CODE NO.	DESCRIPTION	VALIDITY	Q.TY
	1	821.1.182.1A	Closing rocker shaft		4
	2	821.1.181.1A	Exhaust opening rocker shaft		4
	3	208.1.023.1A	Opening rocker		8
	4	209.1.014.6A	L.H. Closing rocker		4
	5	211.1.045.1A	Exhaust valve		4
	6	845.4.005.1B	Valve collet pair		16
	7	303.1.045.1AA	Exhaust valve guide magg. 0,03		4
	7	303.1.045.1AB	Exhaust valve guide magg. 0,06		4
	7	303.1.045.1AC	Exhaust valve guide magg. 0,09		4
	8	764.4.054.1A	Rubber pad		8
	9	840.1.186.1A	See table		8
	10	304.1.049.1A	Exhaust valve seat		4
	10	304.1.049.1AB	Oversize exhaust valve seat 0.03		4
	10	304.1.049.1AC	Oversize exhaust valve seat 0.06		4
	11	840.1.185.1A	See table		8
	12	303.1.044.1AA	Intake valve guide magg. 0,03		4
	12	303.1.044.1AB	Intake valve guide magg. 0,06		4
	12	303.1.044.1AC	Intake valve guide magg. 0,09		4
	13	304.1.048.1A	Intake valve seat		4
	13	304.1.048.1AB	Oversize intake valve seat 0.03		4
	13	304.1.048.1AC	Oversize intake valve seat 0.06		4
	14	210.1.050.1A	Intake valve		4
	15	821.1.180.1A	Closing rocker shaft		4
	16	209.1.013.6A	R.H. Closing rocker		4
	17	821.1.179.1A	Opening rocker shaft		4
	18	799.1.162.1A	R.H. valve return spring		4
	19	799.1.163.1A	L.H. valve return spring		4

NOTES	NO.	CODE NO.	DESCRIPTION	VALIDITY	Q.TY
	20	766.4.019.1A	Stud bolt		8

CATALOGUE No: *915.1.204.1A*
ISSUED: *02 - 04*

DRAWING **014** **COLLECTORS AND HEAD COVERS**

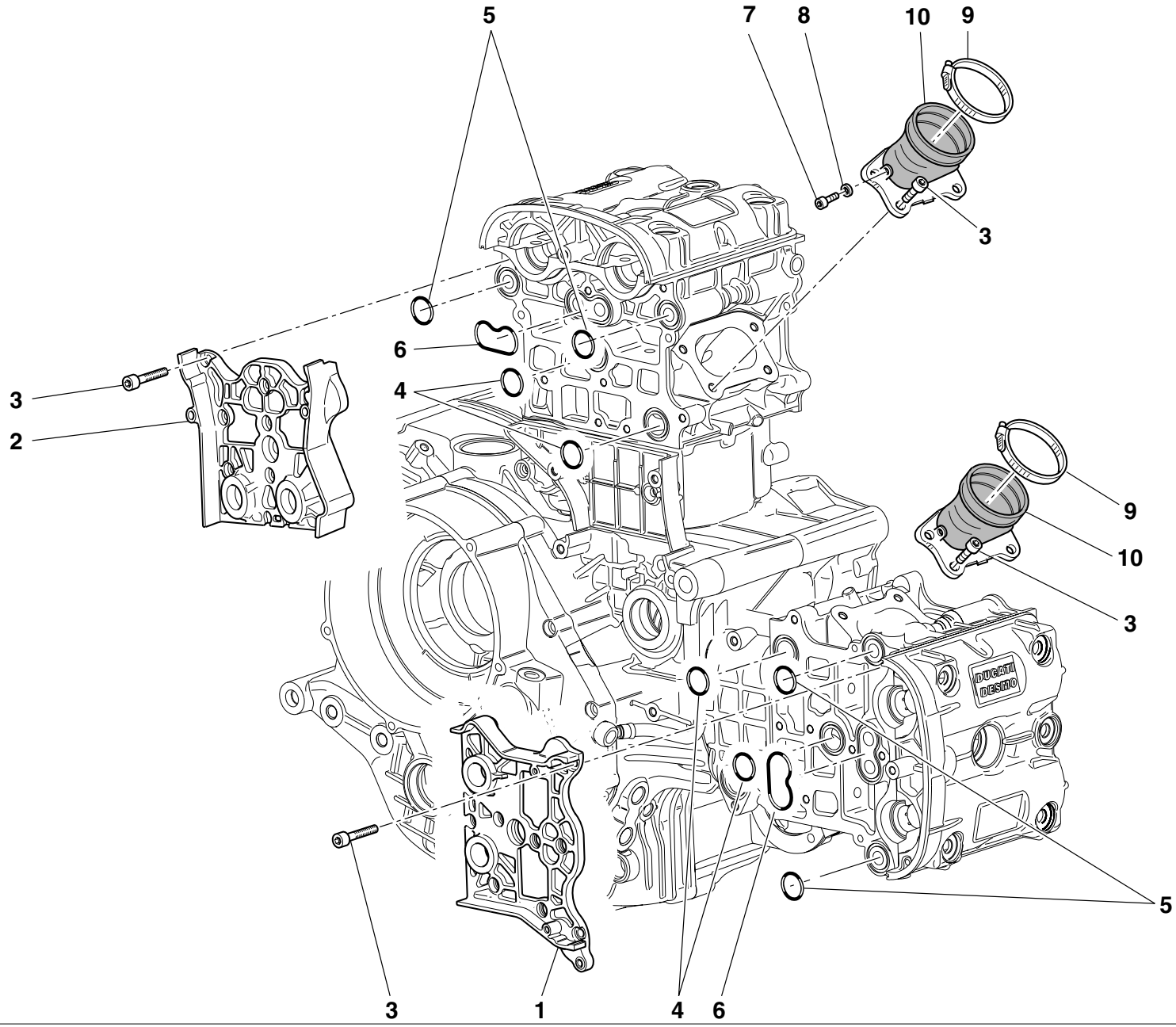

DRAWING **014** **COLLECTORS AND HEAD COVERS**

NOTES	NO.	CODE NO.	DESCRIPTION	VALIDITY	Q.TY
	1	247.1.212.1A	Cover		1
	2	247.1.211.1A	Cover		1
	3	771.5.065.8B	Screw		28
	4	93823.2087	O-ring		4
	5	463.2.050.5A	O-ring		4
	6	788.1.064.1A	Gasket		2
	7	773.5.061.8B	Screw		4
	8	420.2.000.7A	Gasket		2
	9	741.4.067.1A	Hose guide		2
	10	140.2.034.1A	Intake manifold		2

NOTES	NO.	CODE NO.	DESCRIPTION	VALIDITY	Q.TY

CATALOGUE No: *915.1.204.1A*
ISSUED: *02 - 04*

DRAWING **014a** **HEAD COVERS**

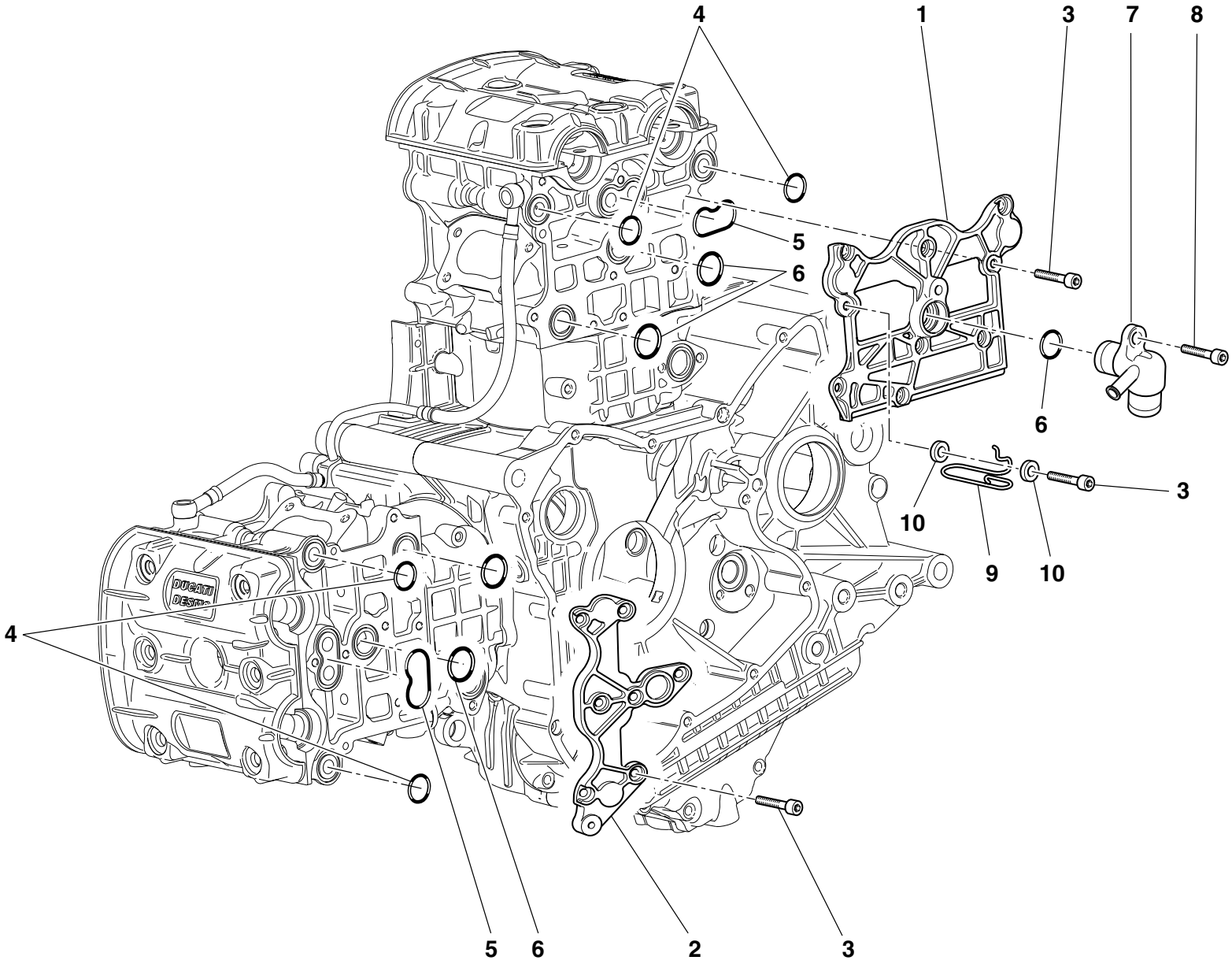

DRAWING **014a** **HEAD COVERS**

NOTES	NO.	CODE NO.	DESCRIPTION	VALIDITY	Q.TY
	1	247.1.163.1A	Cover		1
	2	247.1.161.1A	Cover		1
	3	771.5.065.8B	Screw		18
	4	463.2.050.5A	O-ring		4
	5	788.1.064.1A	Gasket		2
	6	93823.2087	O-ring		4
	7	814.1.117.1A	Water outlet union		1
	8	771.5.071.8B	Screw		1
	9	881.1.030.1A	Holder		1
	10	852.1.176.1A	Washer		2

NOTES	NO.	CODE NO.	DESCRIPTION	VALIDITY	Q.TY

CATALOGUE No: *915.1.204.1A*
ISSUED: *02 - 04*

DRAWING **015** **HEAD**

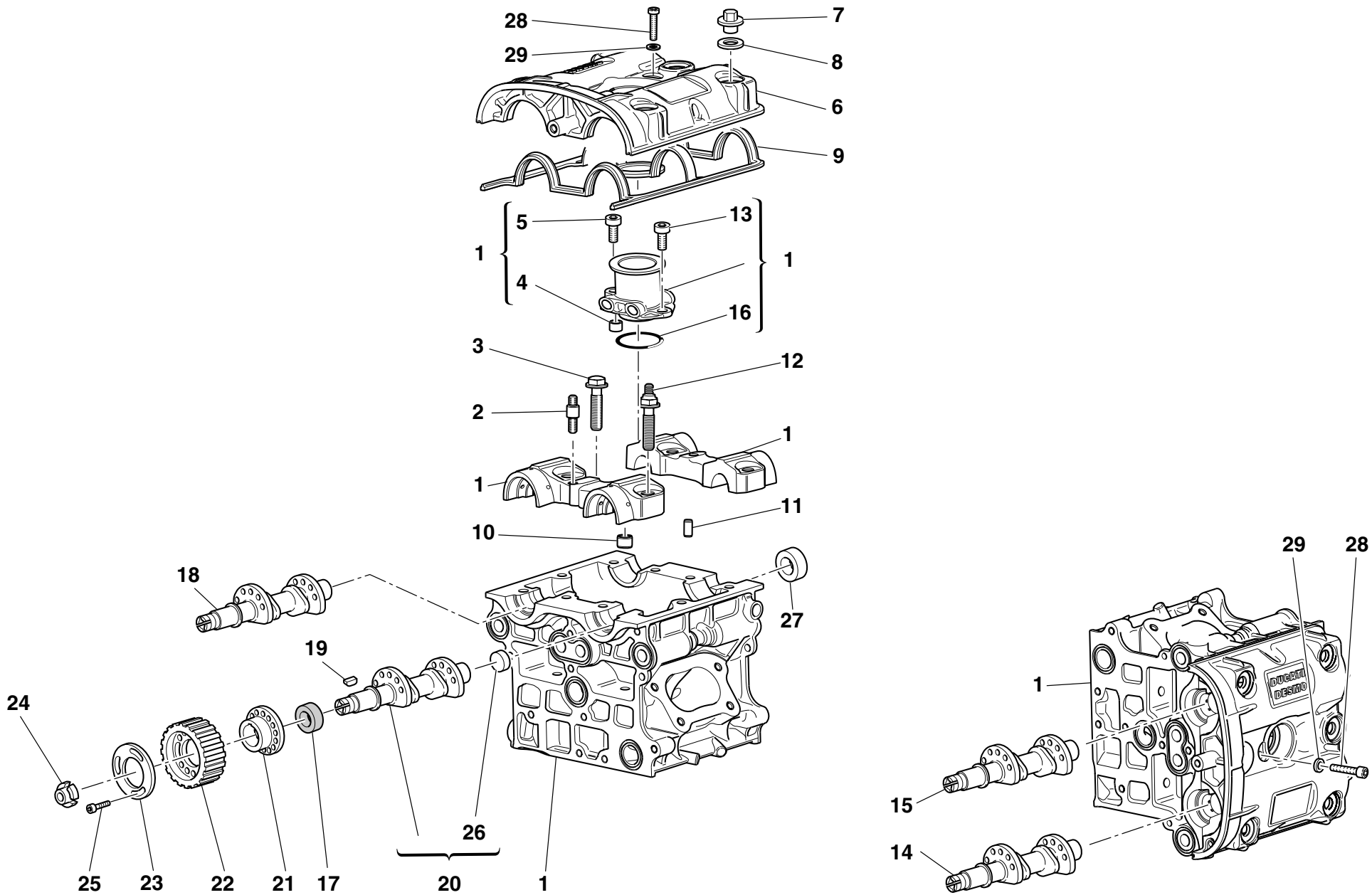

DRAWING **015** **HEAD**

NOTES	NO.	CODE NO.	DESCRIPTION	VALIDITY	Q.TY
	1	301.2.171.1A	Head (4,5,13,16 included)		2
	2	766.1.020.1A	Stud bolt		4
	3	779.1.190.1A	Special screw		8
	4	711.1.092.2A	Bush		2
	5	771.5.069.8B	Screw		2
	6	247.1.261.1B	Cover (MAGNESIUM)		2
	7	750.1.047.1A	Nut		12
	8	856.1.061.2A	Washer		12
	9	788.1.062.1A	Head gasket		2
	10	711.1.091.2A	Bush		8
	11	418.4.052.7A	Pin		4
	12	779.1.189.1A	Special screw		8
	13	771.5.065.8B	Screw		2
	14	148.2.187.1A	Horizontal exhaust camshaft		1
	15	148.2.186.1A	Horizontal intake camshaft		1
	16	886.5.007.1A	O-ring		2
	17	930.5.007.1A	Seal ring		4
	18	148.2.189.1A	Vertical exhaust camshaft		1
	19	680.5.003.1A	Woodruff key		4
	20	148.2.188.1A	Vertical intake camshaft		1
	21	160.1.094.1A	Spacer		4
	22	255.1.019.2A	Timing belt roller		4
	23	856.1.074.2A	Washer		4
	24	703.5.002.2A	Ring nut		4
	25	779.5.030.2A	Screw		12
	26	873.1.005.1A	Cap		4
	27	930.4.020.1A	Cap		4

NOTES	NO.	CODE NO.	DESCRIPTION	VALIDITY	Q.TY
	28	771.5.066.8B	Screw		2
	29	852.1.176.1A	Washer		2

CATALOGUE No: *915.1.204.1A*
ISSUED: *02 - 04*

DRAWING **016** **OIL COOLER**

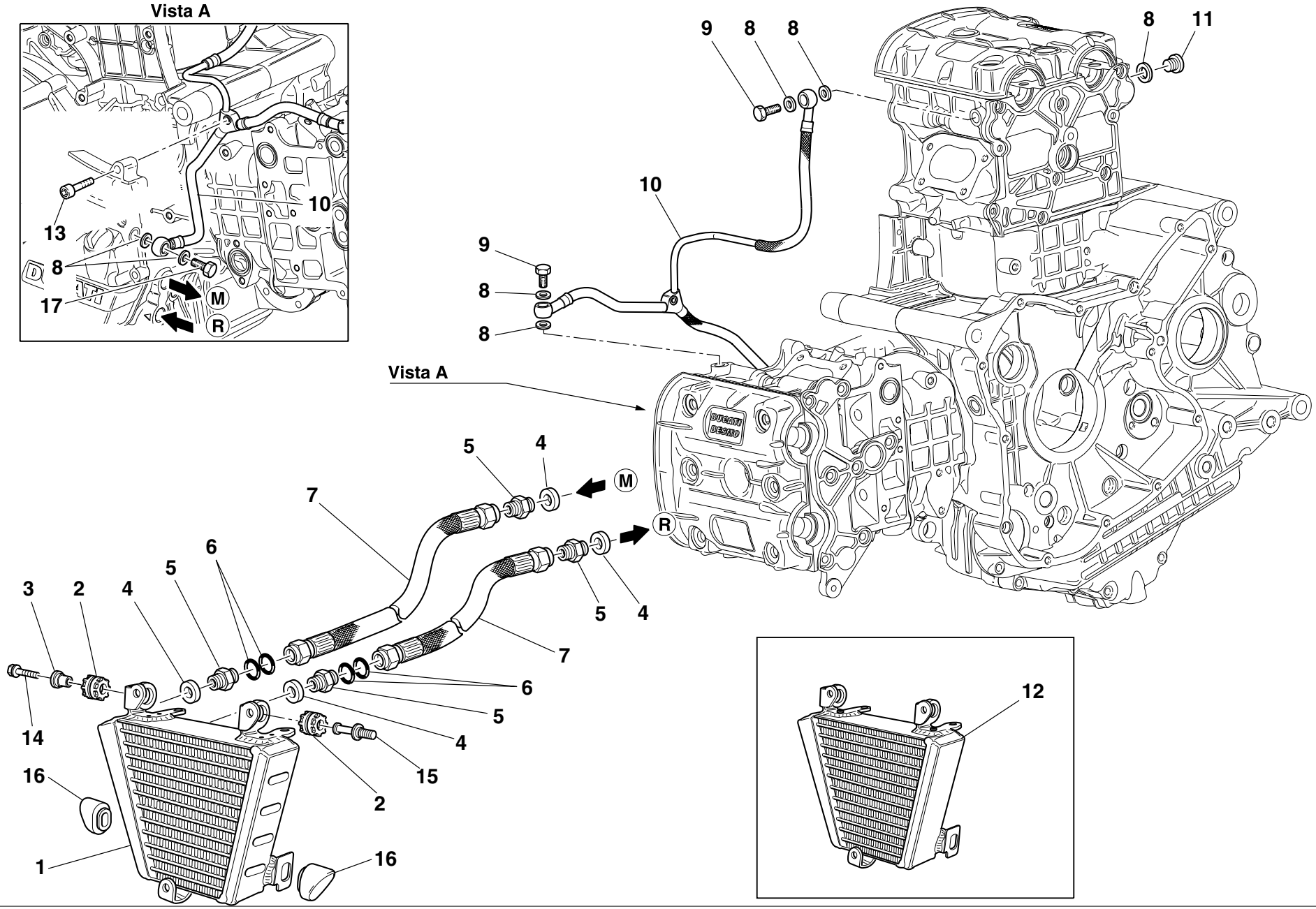

DRAWING **016** **OIL COOLER**

NOTES	NO.	CODE NO.	DESCRIPTION	VALIDITY	Q.TY
	1	548.4.043.1A	Oil cooler		1
	2	764.1.022.1A	Vibration damper pad		2
	3	716.1.003.1A	Spacer		1
	4	420.2.006.4A	Aluminium gasket		4
	5	815.1.022.1A	Nipple		4
	6	886.5.015.1A	O-Ring		4
	7	549.1.030.1A	Oil delivery pipe		2
	8	420.2.001.0A	Gasket th.1		8
	9	779.1.318.1A	Special screw		2
	10	875.1.048.2A	Head lubrication pipe		1
	11	780.5.001.1A	Cap		2
	12	548.4.042.1A	Oil cooler		1
	13	771.5.041.8B	Screw		1
	14	8000.61070	Screw		1
	15	821.1.159.1A	Pin		1
	16	866.1.044.1A	Rubber pad		2
	17	781.1.009.1A	Special screw		1

NOTES	NO.	CODE NO.	DESCRIPTION	VALIDITY	Q.TY

CATALOGUE No: *915.1.204.1A*
ISSUED: *02 - 04*

DRAWING **017** **THROTTLE BODY**

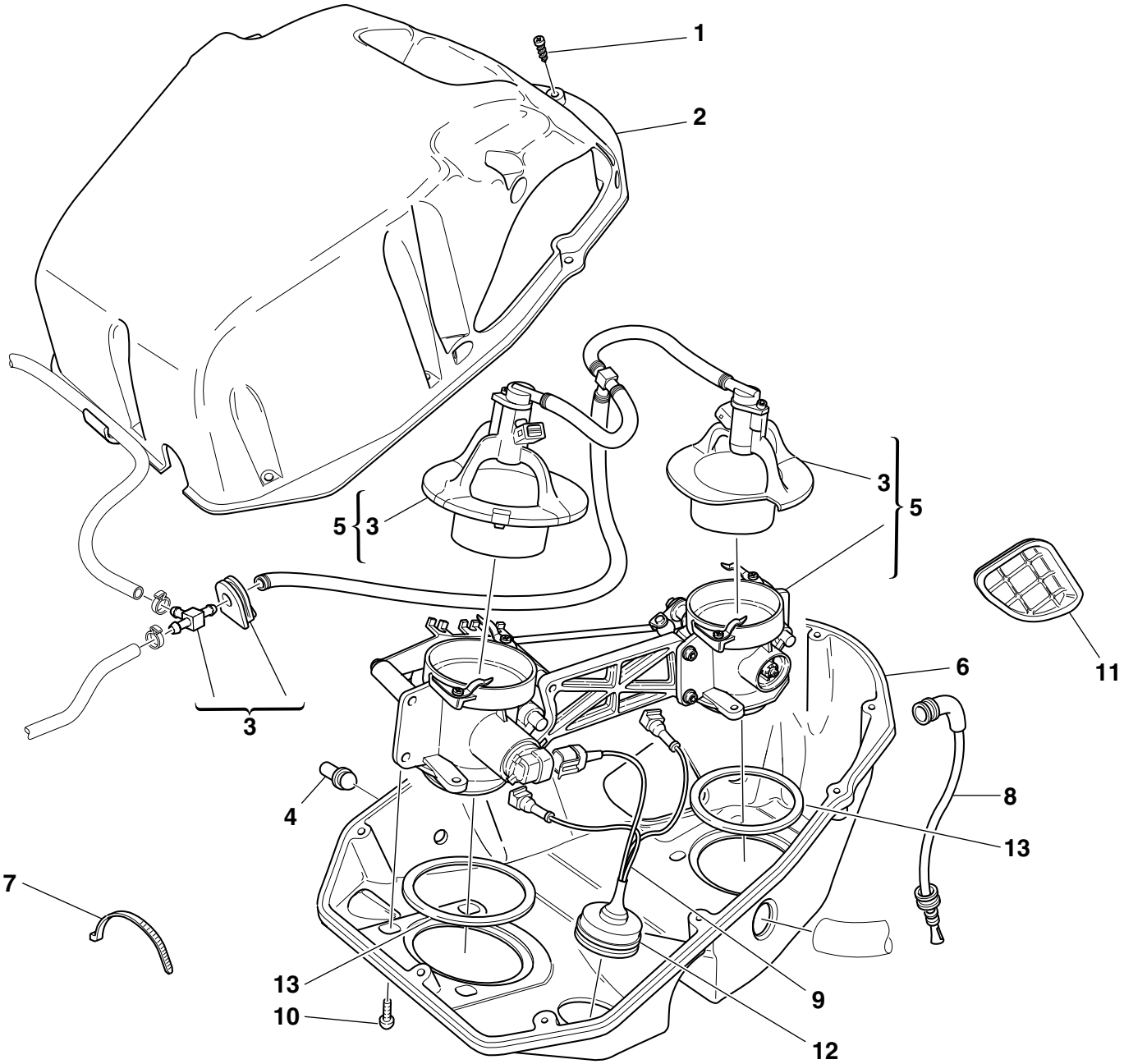

DRAWING **017** **THROTTLE BODY**

NOTES	NO.	CODE NO.	DESCRIPTION	VALIDITY	Q.TY
	1	774.5.002.1B	Screw		10
	2	246.1.073.1A	Filter case cover		1
	3	135.2.009.1A	Kit		1
	4	872.4.043.1A	Cap		2
	5	282.4.044.1A	Complete throttle body		1
	6	442.1.073.1A	Lower filter box		1
	7	741.4.038.1A	Hose guide		3
	8	876.1.086.1A	Exhaust pipe		1
	9	510.1.241.1A	Throttle body wiring		1
	10	779.1.274.1A	Screw		6
	11	672.1.030.1A	Air box cowling		1
	12	764.1.028.1A	Rubber pad		1
	13	791.1.058.1A	Gasket		2

NOTES	NO.	CODE NO.	DESCRIPTION	VALIDITY	Q.TY

CATALOGUE No: *915.1.204.1A*
ISSUED: *02 - 04*

DRAWING **018** **BATTERY BOX MOUNT**

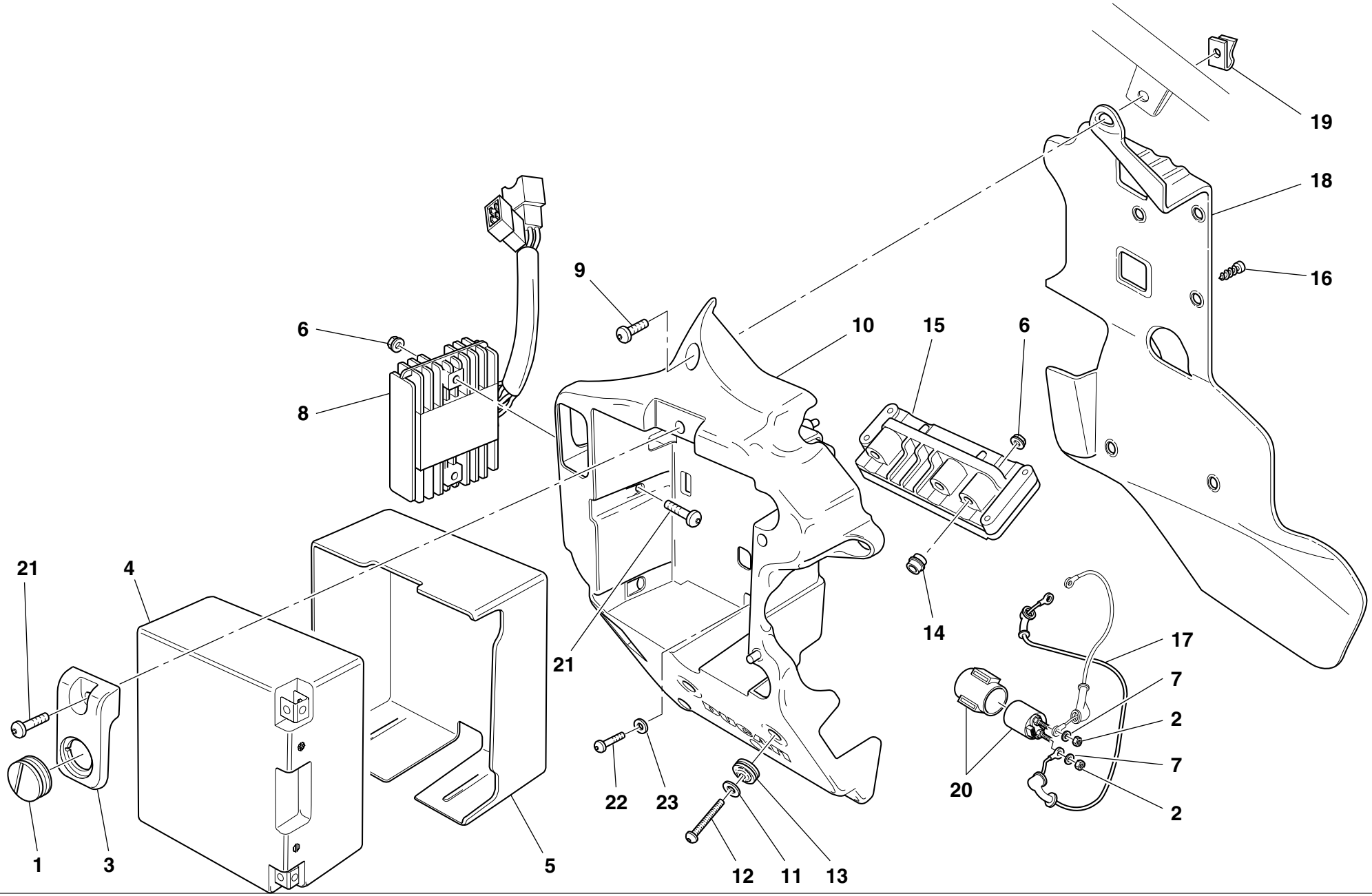

DRAWING **018** **BATTERY BOX MOUNT**

NOTES	NO.	CODE NO.	DESCRIPTION	VALIDITY	Q.TY
	1	764.1.062.1A	Rubber pad		1
	2	417.9.050.6A	Nut		2
	3	247.1.205.1A	Cover		1
	4	395.4.013.1A	Battery		1
	5	791.1.060.1A	Battery resting buffer		1
	6	729906FN1	Nut		4
	7	462.4.037.6A	Spring washer		2
	8	540.4.019.1A	Regulator		1
	9	771.5.666.8B	Screw		2
	10	829.1.419.1A	Battery box mount		1
	11	852.1.160.1A	Washer		2
	12	775.1.034.1AB	Screw		2
	13	0797.72.068	Vibration damper pad		3
	14	821.1.171.1A	Pin		2
	15	286.4.112.1C	Injection control unit		1
	16	772.5.034.1A	Screw		4
	17	514.1.040.1A	Solenoid starter-starter motor cable		1
	18	460.1.125.1A	Battery mount heat guard		1
	19	850.4.041.1A	Quik fastening		2
	20	397.4.002.1A	Remote switch		1
	21	775.1.022.1A	Screw		3
	22	60N107330	Screw		1
	23	852.1.161.1A	Washer		1

NOTES	NO.	CODE NO.	DESCRIPTION	VALIDITY	Q.TY

CATALOGUE No: *915.1.204.1A*
ISSUED: *02 - 04*

DRAWING **018a** **INJECTION SYSTEM**

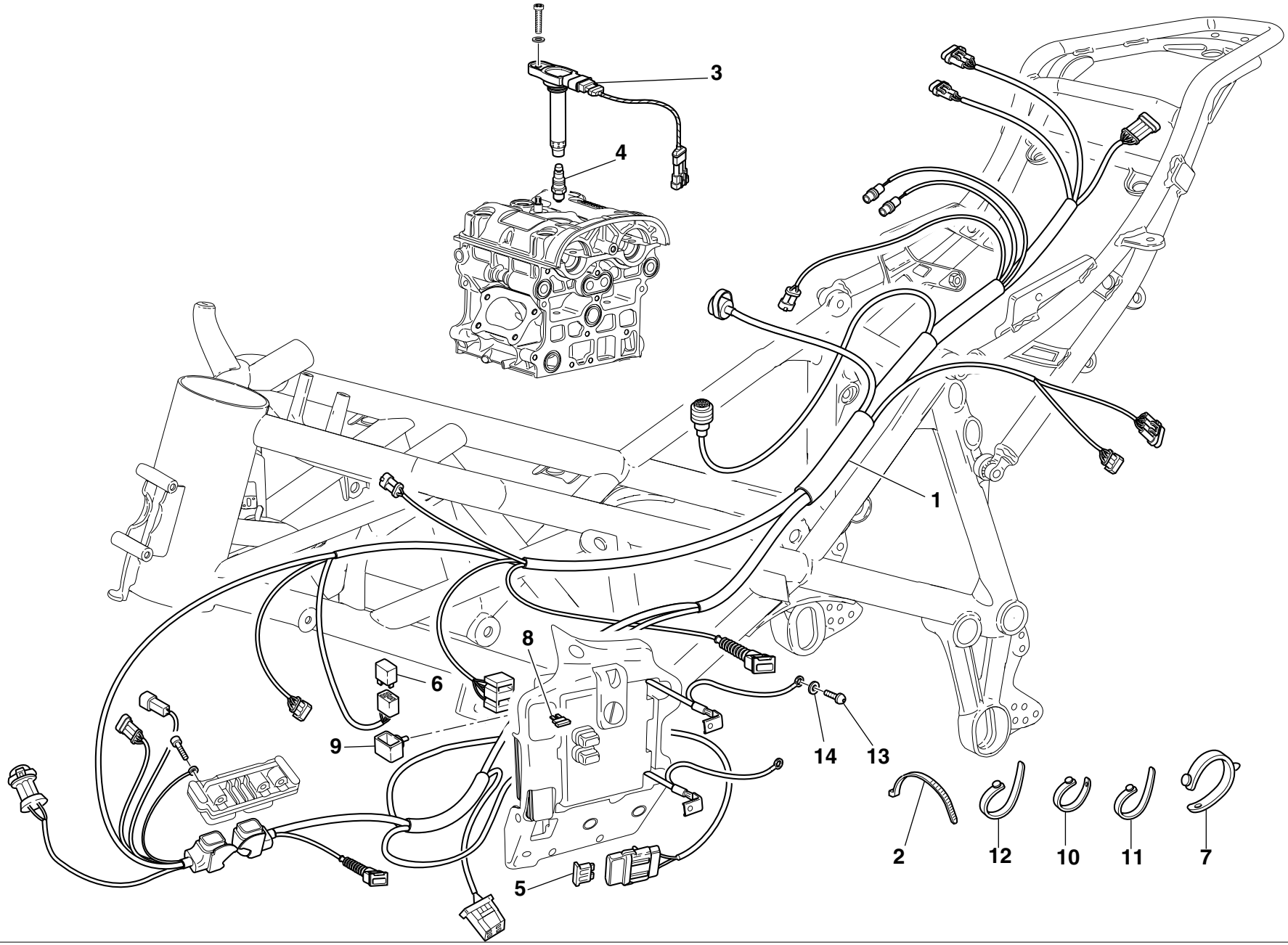

DRAWING **018a** **INJECTION SYSTEM**

NOTES	NO.	CODE NO.	DESCRIPTION	VALIDITY	Q.TY
	1	510.1.323.2A	Main wiring		1
	2	741.4.038.1A	Hose guide		9
	3	380.1.014.1A	Coil		2
	4	670.4.030.1A	Spark plug		2
	5	389.4.014.1A	Fuse 40A		1
	6	541.4.007.1A	Relay		1
	7	8000.53724	Hose guide		9
	8	389.4.006.1A	Fuse 3A		1
	8	389.4.013.1A	Fuse 20A		1
	9	829.1.190.1A	Rubber holder		1
	10	741.1.010.1A	Hose guide		3
	11	741.1.012.1A	Hose guide		7
	12	741.1.013.1A	Hose guide		8
	13	775.1.019.1A	Screw		1
	14	852.1.160.1A	Washer		1

NOTES	NO.	CODE NO.	DESCRIPTION	VALIDITY	Q.TY

CATALOGUE No: *915.1.204.1A*
ISSUED: *02 - 04*

DRAWING **019** **EXHAUST SYSTEM**

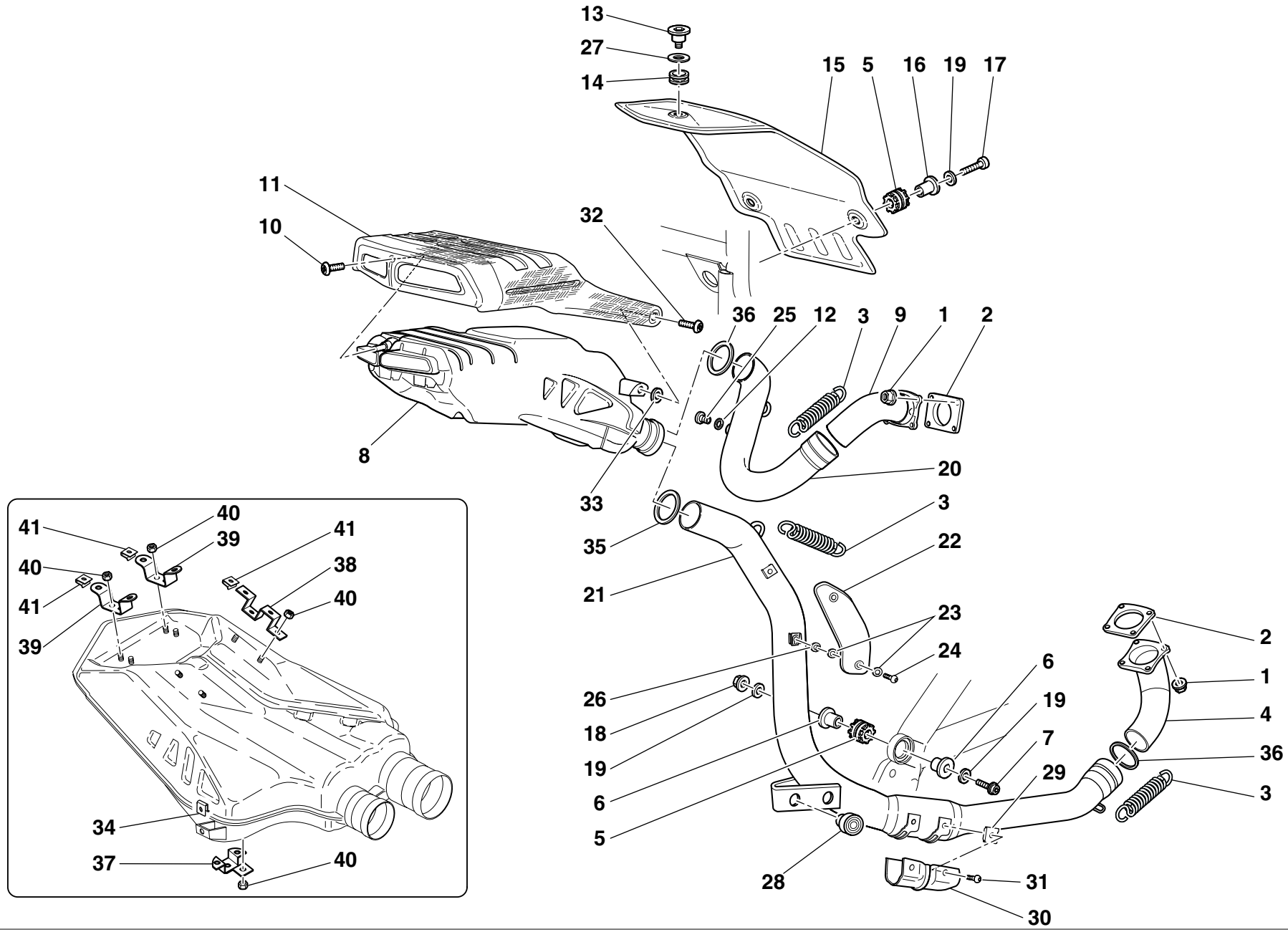

DRAWING **019** **EXHAUST SYSTEM**

NOTES	NO.	CODE NO.	DESCRIPTION	VALIDITY	Q.TY
	1	748.1.024.1A	Nut		8
	2	790.1.004.1A	Exhaust gasket		2
	3	799.1.048.2A	Spring		3
	4	570.1.072.1B	Horizontal head exhaust pipe		1
	5	764.1.024.1A	Vibration damper pad		3
	6	713.1.082.1A	Spacer		2
	7	772.5.038.1AB	Screw		1
	8	573.1.064.3B	Exhaust silencer		1
	9	571.1.072.1B	Vertical head exhaust pipe		1
	10	775.1.031.1B	Screw		1
	11	460.1.160.1A	Silencer thermal protection (CARBON)		1
	12	420.2.001.0A	Gasket th.1		2
	13	779.1.260.1A	Special screw		1
	14	764.1.042.1A	Vibration damper pad		1
	15	460.1.112.1A	Tail guard thermal protection		1
	16	8000.62652	Spacer		2
	17	771.5.070.2BB	Screw		2
	18	729906FN1	Nut		1
	19	8000.56359	Washer		4
	20	571.1.075.1B	Vertical head exhaust pipe		1
	21	570.1.074.1B	Horizontal head exhaust pipe		1
	22	247.1.188.1A	Protection		1
	23	852.1.072.1A	Washer		4
	24	775.1.035.1B	Screw		2
	25	780.1.007.1A	Cap		2
	26	716.1.107.1B	Spacer		2
	27	852.1.163.1A	Washer		1

NOTES	NO.	CODE NO.	DESCRIPTION	VALIDITY	Q.TY
	28	764.1.063.1A	Rubber pad		2
	29	850.4.064.1A	Nut with clip		4
	30	460.1.159.1A	Thermal protection		1
	31	779.1.334.1A	Screw		4
	32	775.1.033.1A	Screw		2
	33	856.1.091.1A	Washer		2
	34	746.4.006.1A	Quik fastening		2
	35	790.1.010.1A	Gasket		1
	36	790.1.009.1A	Gasket		2
	37	576.1.046.1A	Bracket		1
	38	576.1.047.1A	Bracket		2
	39	576.1.048.1A	Bracket		2
	40	749.4.009.1A	Nut		11
	41	746.4.007.1A	Quik fastening		8

CATALOGUE No: *915.1.204.1A*
ISSUED: *02 - 04*

DRAWING **019a** **CARBON EXHAUST SYSTEM**

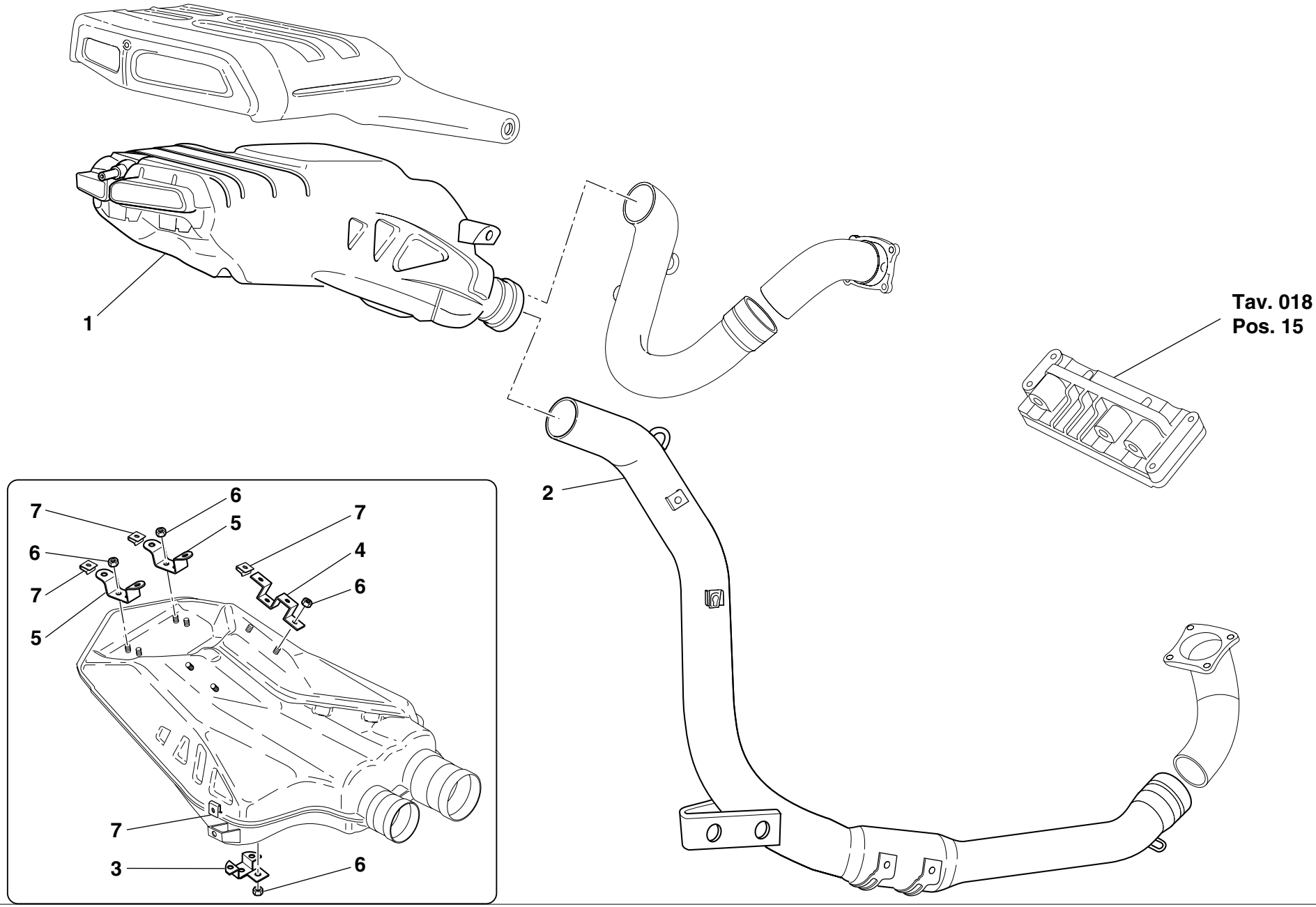

DRAWING **019a** **CARBON EXHAUST SYSTEM**

NOTES	NO.	CODE NO.	DESCRIPTION	VALIDITY	Q.TY
	1	573.1.081.1A	Exhaust silencer (CARBON)		1
	2	570.1.099.1A	Horizontal head exhaust pipe		1
	3	576.1.046.1A	Bracket		1
	4	576.1.047.1A	Bracket		2
	5	576.1.048.1A	Bracket		2
	6	749.4.009.1A	Nut		11
	7	746.4.006.1A	Quik fastening		10

NOTES	NO.	CODE NO.	DESCRIPTION	VALIDITY	Q.TY

CATALOGUE No: *915.1.204.1A*
ISSUED: *02 - 04*

DRAWING **020** **FRONT HEAD-LIGHT AND INSTRUMENT PANEL**

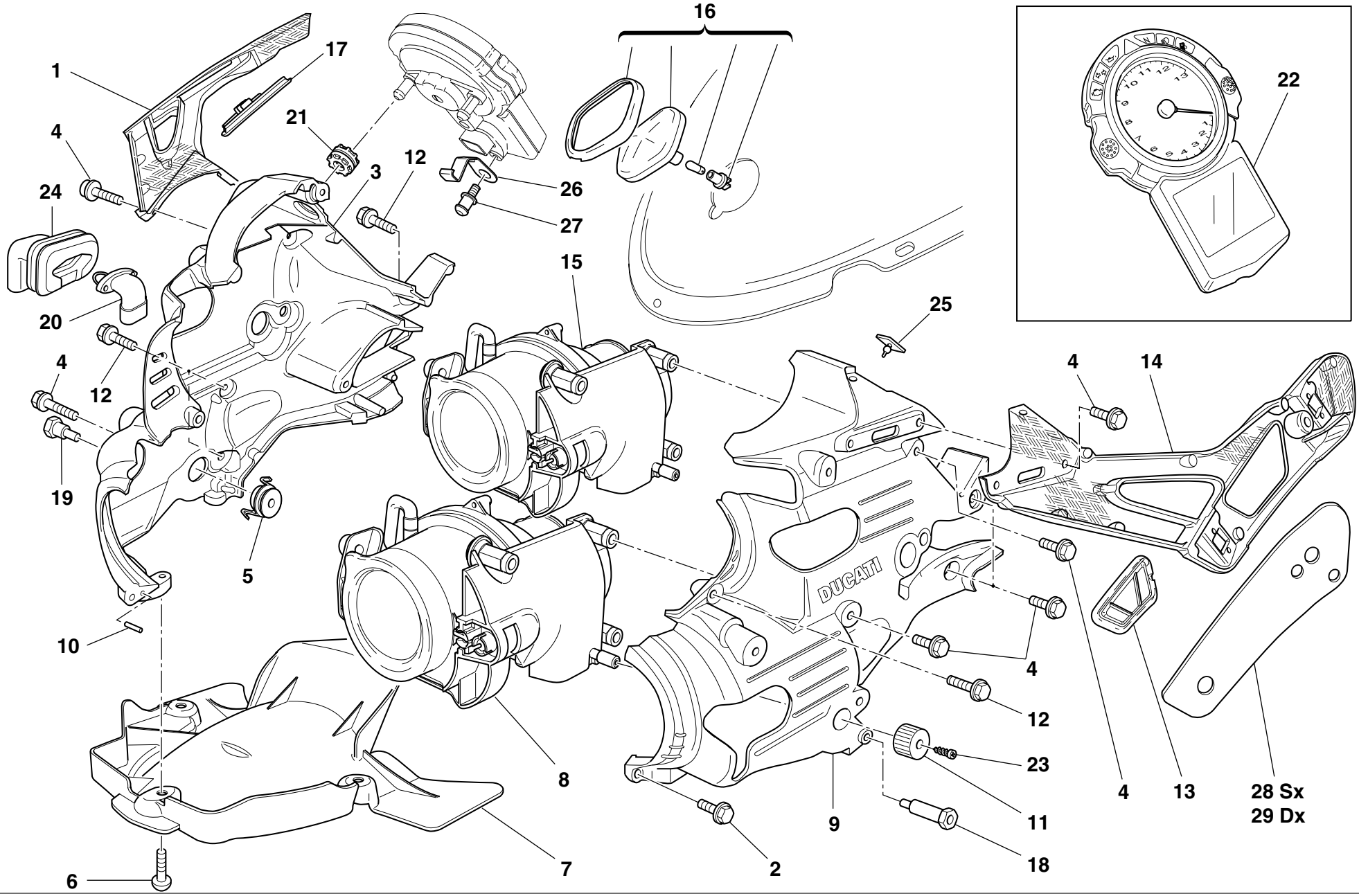

DRAWING **020** **FRONT HEAD-LIGHT AND INSTRUMENT PANEL**

NOTES	NO.	CODE NO.	DESCRIPTION	VALIDITY	Q.TY
	1	829.2.479.1A	R.H. mirror holder (CARBON)		1
	2	772.5.031.1AB	Screw		3
	3	829.1.369.1A	Headlight holder		1
	4	772.5.029.1AB	Screw		14
	5	750.4.010.1A	Nut		4
	6	775.1.008.3A	Screw		4
	7	460.1.120.2A	Mudflap		1
	8	520.4.022.1C	Low beam		1
	9	829.1.370.1A	Headlight holder		1
	10	462.9.012.8A	Spring pin		2
	11	835.1.005.1B	Knob		2
	12	772.5.038.1AB	Screw		5
	13	872.1.036.1A	LH mirrors support plug		1
	14	829.2.480.1A	L.H. mirror holder (CARBON)		1
	15	520.4.023.1B	High beam		1
	16	536.2.002.2A	Parking light assy		1
	17	872.1.037.1A	RH mirrors support plug		1
	18	684.1.056.1A	L.H. stud bolt		1
	19	684.1.057.1A	R.H. Stud bolt		1
	20	552.4.012.1A	Air temperature sensor		1
	21	764.1.022.1A	Vibration damper pad		3
	22	406.1.015.1F	Complete instrument panel		1
	23	772.5.035.1A	Screw		2
	24	829.1.401.1A	Holder sensor		1
	25	866.1.036.1A	Rubber pad		2
	26	826.1.015.1A	Plate		1
	27	821.1.184.1A	Pin		1

NOTES	NO.	CODE NO.	DESCRIPTION	VALIDITY	Q.TY
	28	764.1.059.1A	Rearview mirror rear rubber		1
	29	764.1.047.1A	Rearview mirror front rubber		1

CATALOGUE No: *915.1.204.1A*
ISSUED: *02 - 04*

DRAWING **020a** **FRONTO WIRING**

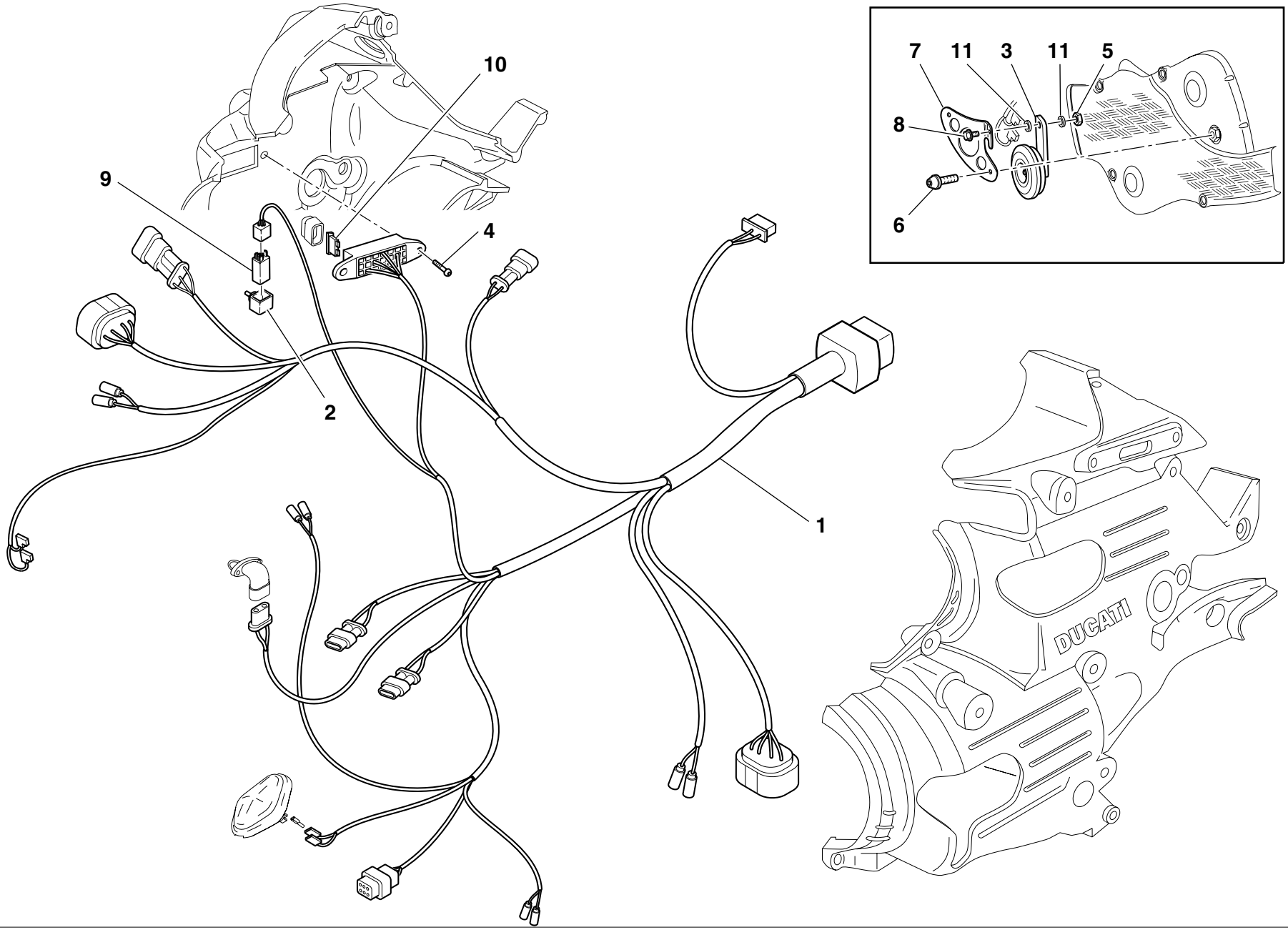

DRAWING **020a** **FRONTO WIRING**

NOTES	NO.	CODE NO.	DESCRIPTION	VALIDITY	Q.TY
	1	510.1.243.3A	Front wiring		1
	2	829.1.190.1A	Rubber holder		1
	3	516.4.003.1B	Horn (BLACK)		1
	4	775.1.027.1A	Screw		2
	5	749.4.004.1A	Nut		1
	6	772.5.032.1A	Screw		2
	7	829.1.386.1A	Bracket		1
	8	772.5.037.1AB	Screw		1
	9	541.4.007.1A	Relay		1
	10	389.4.006.1A	Fuse 3A		1
	10	389.4.007.1A	Fuse 7.5A		1
	10	389.4.008.1A	Fuse 15A		1
	10	389.4.013.1A	Fuse 20A		1
	11	716.1.111.1A	Spacer		2

NOTES	NO.	CODE NO.	DESCRIPTION	VALIDITY	Q.TY

CATALOGUE No: *915.1.204.1A*
ISSUED: *02 - 04*

DRAWING **021** **HALF-HANDLEBARS - SHOCK-ADSORBER**

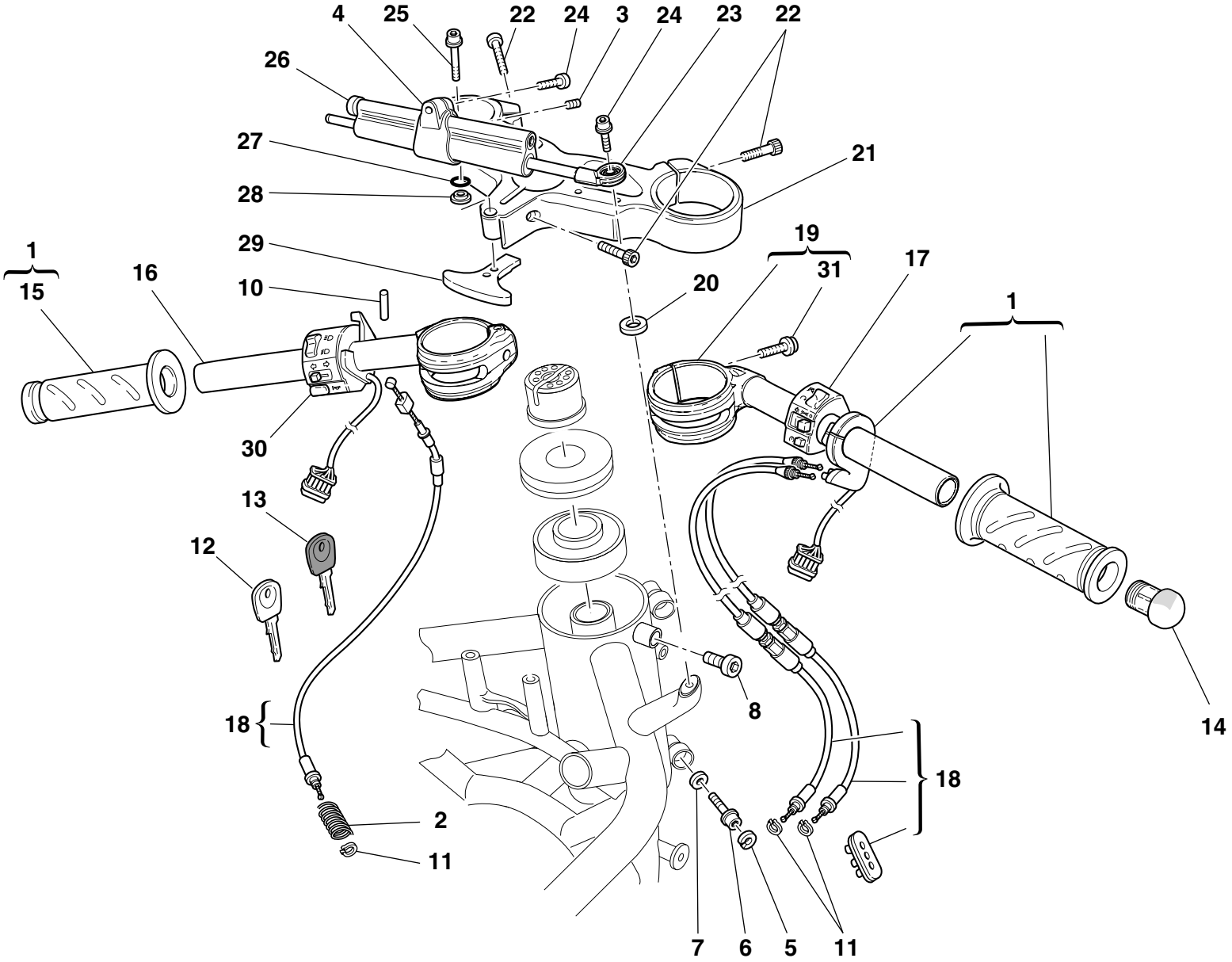

DRAWING **021** **HALF-HANDLEBARS - SHOCK-ADSORBER**

NOTES	NO.	CODE NO.	DESCRIPTION	VALIDITY	Q.TY
	1	654.2.016.1A	Throttle control		1
	2	799.1.171.1A	Starter control transmission return spring		1
	3	778.5.009.1A	Threaded dowel		1
	4	808.2.047.1A	Clamp		1
	5	884.5.001.1A	Circlip		2
	6	771.5.723.8B	Screw		2
	7	852.1.071.1A	Washer		2
	8	779.1.060.1A	Special screw		1
	9	747.5.003.1A	Nut		2
	10	861.5.013.1A	Spring pin		2
	11	0170.91.730	Ring		3
	12	598.4.016.1A	Wrench with Transponder		1
	13	598.4.018.1A	Wrench without Transponder		1
	14	872.1.015.1A	Cap		2
	15	361.1.002.1A	L.H. grip		1
	16	360.1.044.1A	L.H. handlebar		1
	17	650.4.008.1B	R.H. switch		1
	18	656.2.001.1A	Cables and rubber unit		1
	19	360.1.043.1A	R.H. handlebar		1
	20	713.1.209.1A	Spacer		1
	21	341.1.046.1A	Steering head		1
	22	771.5.727.8B	Screw		3
	23	848.2.002.1A	Joint		1
	24	771.5.666.8B	Screw		2
	25	771.5.673.8B	Screw		1
	26	364.1.003.1A	Steering damper		1
	27	886.5.014.1A	O-ring		1

NOTES	NO.	CODE NO.	DESCRIPTION	VALIDITY	Q.TY
	28	713.1.210.1A	Spacer		1
	29	341.1.036.1A	Steering lock arm		1
	30	651.4.013.1A	L.H. switch		1
	31	771.5.725.8B	Screw		2

CATALOGUE No: *915.1.204.1A*
ISSUED: *02 - 04*

DRAWING **021a** **HALF-HANDLEBARS - SHOCK-ADSORBER**

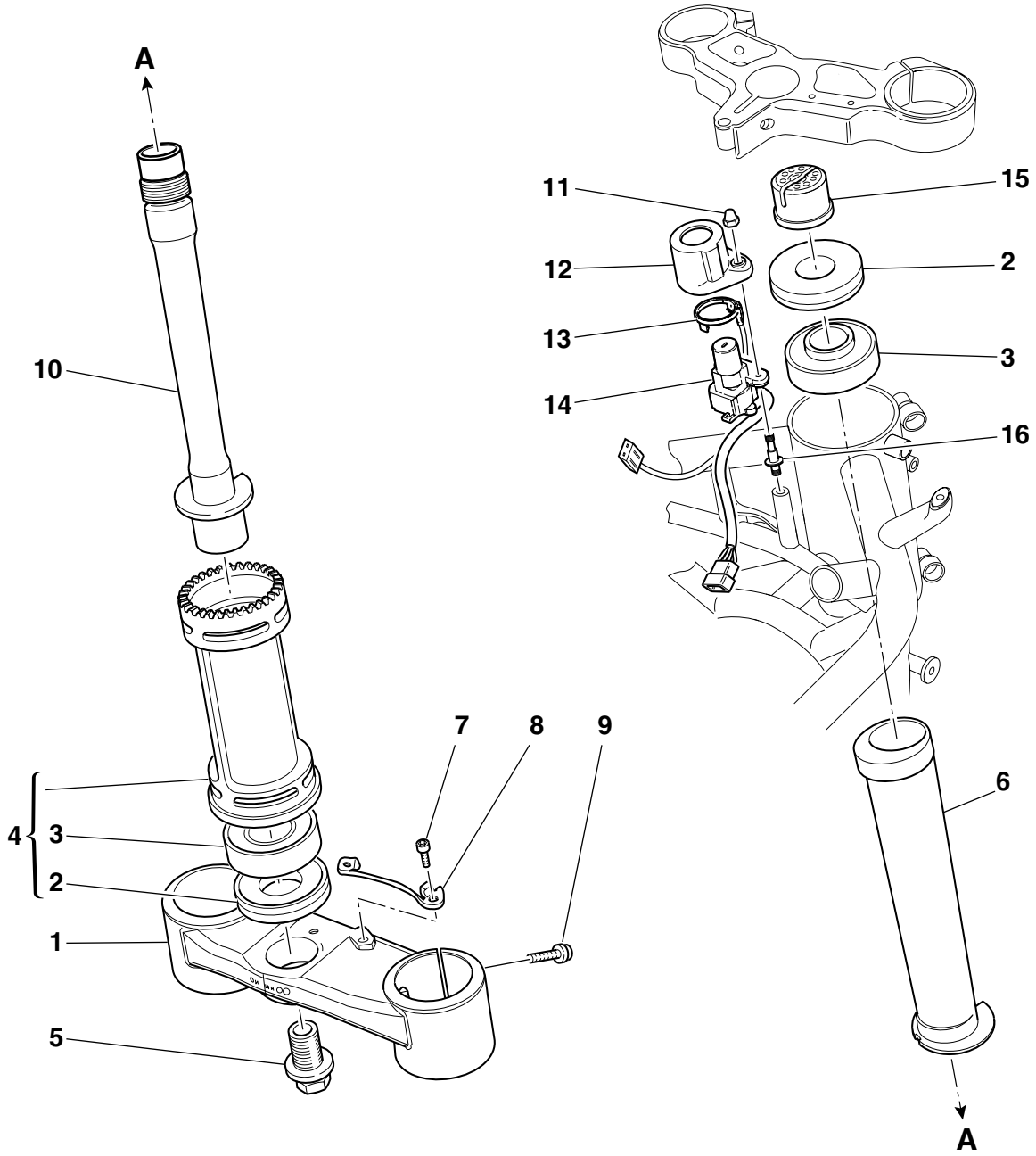

DRAWING **021a** **HALF-HANDLEBARS - SHOCK-ADSORBER**

NOTES	NO.	CODE NO.	DESCRIPTION	VALIDITY	Q.TY
	1	342.2.038.1A	Steering head base assembly		1
	2	930.1.004.1A	Seal ring		2
	3	702.4.004.1A	Bearing		2
	4	343.2.005.1A	Tube		1
	5	779.1.365.1A	Special screw		1
	6	710.1.105.1A	Steering eccentric nut		1
	7	773.5.039.8B	Screw		2
	8	827.1.273.1A	Plate		1
	9	771.5.725.8B	Screw		4
	10	343.1.018.1A	Pin		1
	11	749.4.002.1A	Nut		2
	12	246.1.076.1A	Cover		1
	13	518.4.004.1C	Antenna		1
	14	652.4.006.1A	Key-operated switch		1
	15	703.1.035.1A	Ring nut		1
	16	779.1.252.1A	Special screw		2

NOTES	NO.	CODE NO.	DESCRIPTION	VALIDITY	Q.TY

CATALOGUE No: *915.1.204.1A*
ISSUED: *02 - 04*

DRAWING **021b** **FRONT FORK**

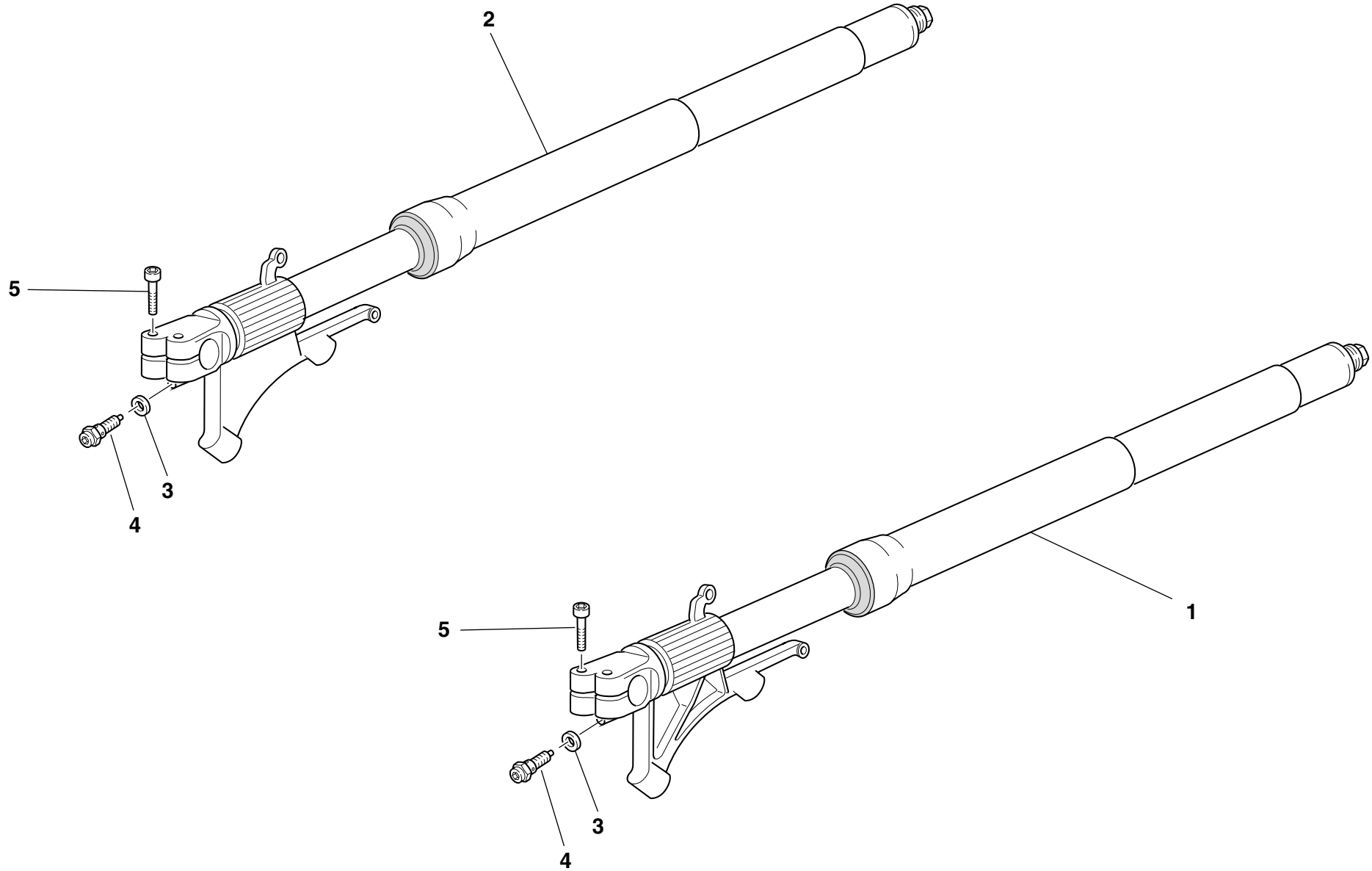

DRAWING **021b** **FRONT FORK**

NOTES	NO.	CODE NO.	DESCRIPTION	VALIDITY	Q.TY
	1	340.2.242.1A	L.H. fork leg assembly		1
	2	340.2.241.1A	R.H. fork leg assembly		1
	3	349.1.096.1A	Special washer		2
	4	349.2.010.1A	Adjusting screw		2
	5	779.1.371.1A	Screw		4

NOTES	NO.	CODE NO.	DESCRIPTION	VALIDITY	Q.TY

CATALOGUE No: *915.1.204.1A*
ISSUED: *02 - 04*

DRAWING **022** **FRAME**

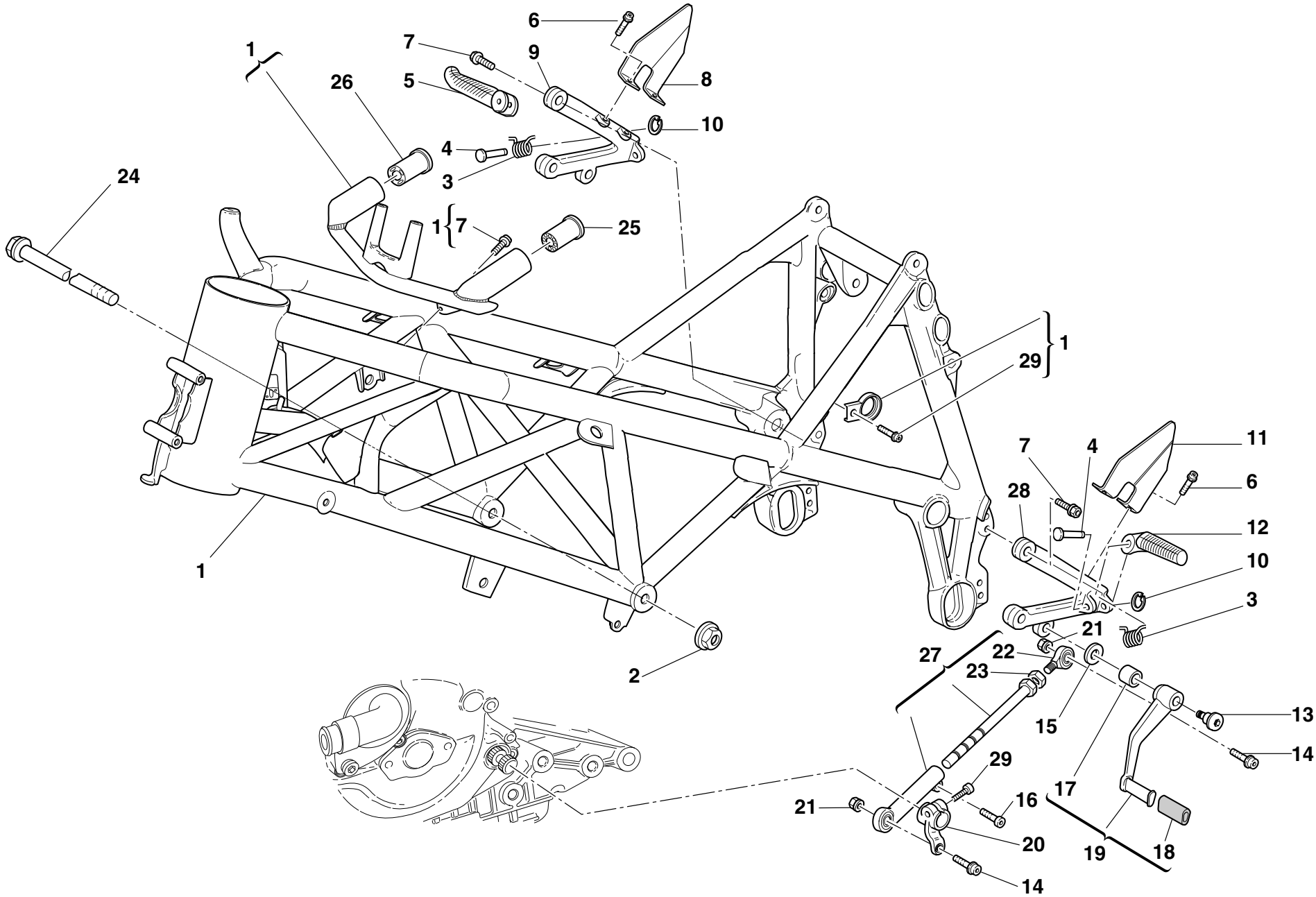

DRAWING **022** **FRAME**

NOTES	NO.	CODE NO.	DESCRIPTION	VALIDITY	Q.TY
	1	470.2.178.1AW	Frame (RED)		1
	2	750.1.062.1A	Nut		2
	3	799.1.166.1A	Spring		2
	4	821.1.051.1AB	Pin		2
	5	464.1.006.1A	Front R.H. foot peg		1
	6	771.5.637.8B	Screw		4
	7	771.5.723.8B	Screw		6
	8	247.1.191.1A	R.H. protection		1
	9	824.1.083.1A	R.H. foot peg holder plate		1
	10	884.5.003.1A	Ring		2
	11	247.1.192.1A	L.H. protection		1
	12	464.1.005.1A	Front L.H. foot peg		1
	13	821.1.170.1A	Pin		1
	14	771.5.667.8B	Screw		2
	15	852.1.151.1A	Washer		1
	16	771.5.665.8B	Screw		1
	17	0000.59056	Bush		1
	18	764.1.011.1A	Rubber pad		1
	19	456.2.033.1A	Gearchange lever		1
	20	456.1.006.2A	Gearchange control lever		1
	21	749.4.004.1A	Nut		2
	22	76401.0002	Ball joint		1
	23	747.5.003.1A	Nut		1
	24	779.1.213.1A	Screw		2
	25	764.1.051.1A	Rubber pad		1
	26	764.1.050.1A	Rubber pad		1
	27	117.2.034.1B	Gearbox transmission rod assembly		1

NOTES	NO.	CODE NO.	DESCRIPTION	VALIDITY	Q.TY
	28	824.1.084.1A	L.H. foot peg holder plate		1
	29	771.5.666.8B	Screw		2

CATALOGUE No: *915.1.204.1A*
ISSUED: *02 - 04*

DRAWING **022a** **STAND**

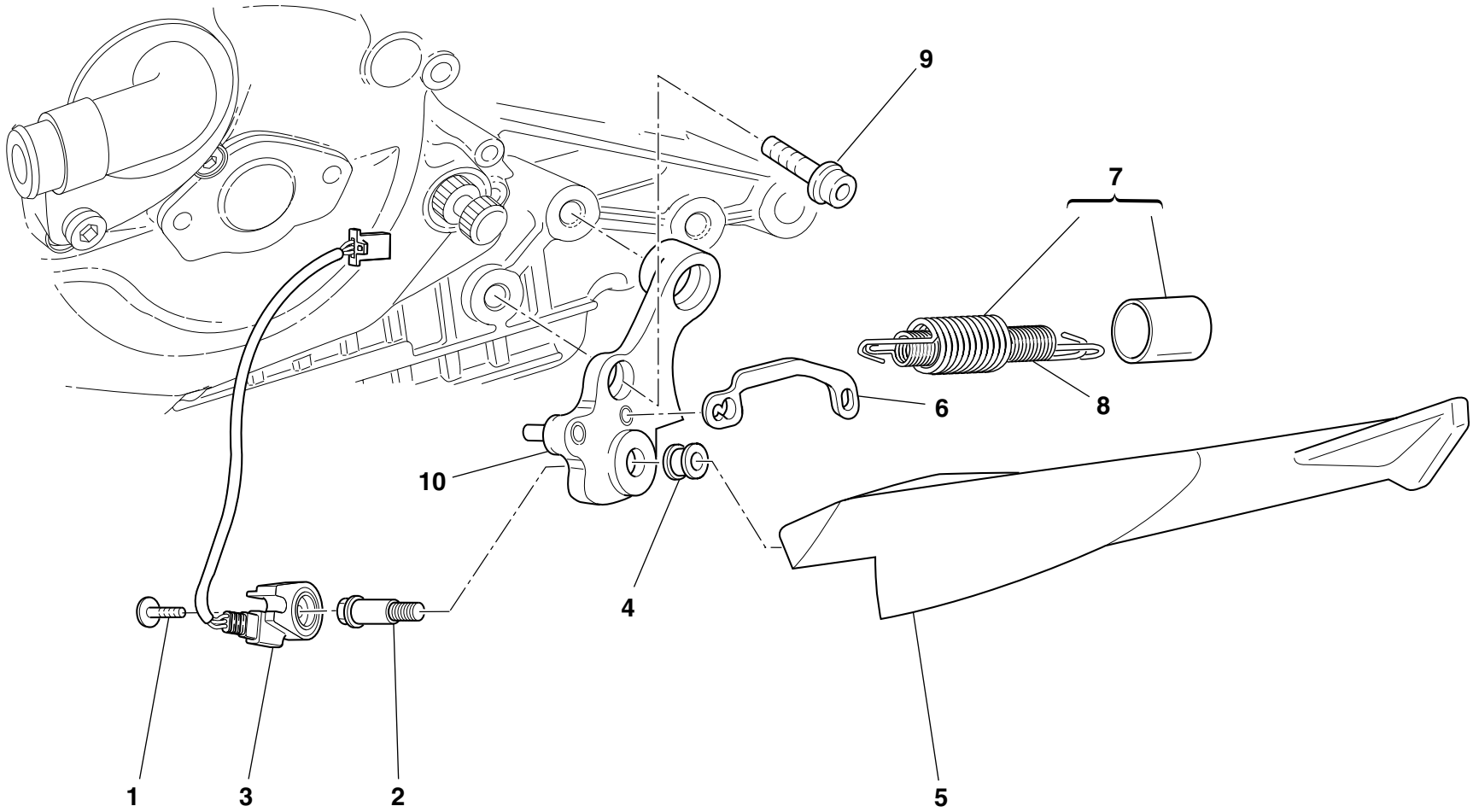

DRAWING **022a** **STAND**

NOTES	NO.	CODE NO.	DESCRIPTION	VALIDITY	Q.TY
	1	779.4.005.2A	Screw		1
	2	821.1.134.1A	Pin		1
	3	539.1.023.2A	Switch		1
	4	711.1.113.1A	Bush		1
	5	556.1.031.1A	Side stand		1
	6	829.1.366.1A	Plate		1
	7	799.2.159.1A	Complete spring		1
	8	799.1.158.1A	Inner spring		1
	9	771.5.154.8B	Screw		2
	10	556.2.032.1A	Plate		1

NOTES	NO.	CODE NO.	DESCRIPTION	VALIDITY	Q.TY

CATALOGUE No: *915.1.204.1A*
ISSUED: *02 - 04*

DRAWING **023** **CLUTCH CONTROL**

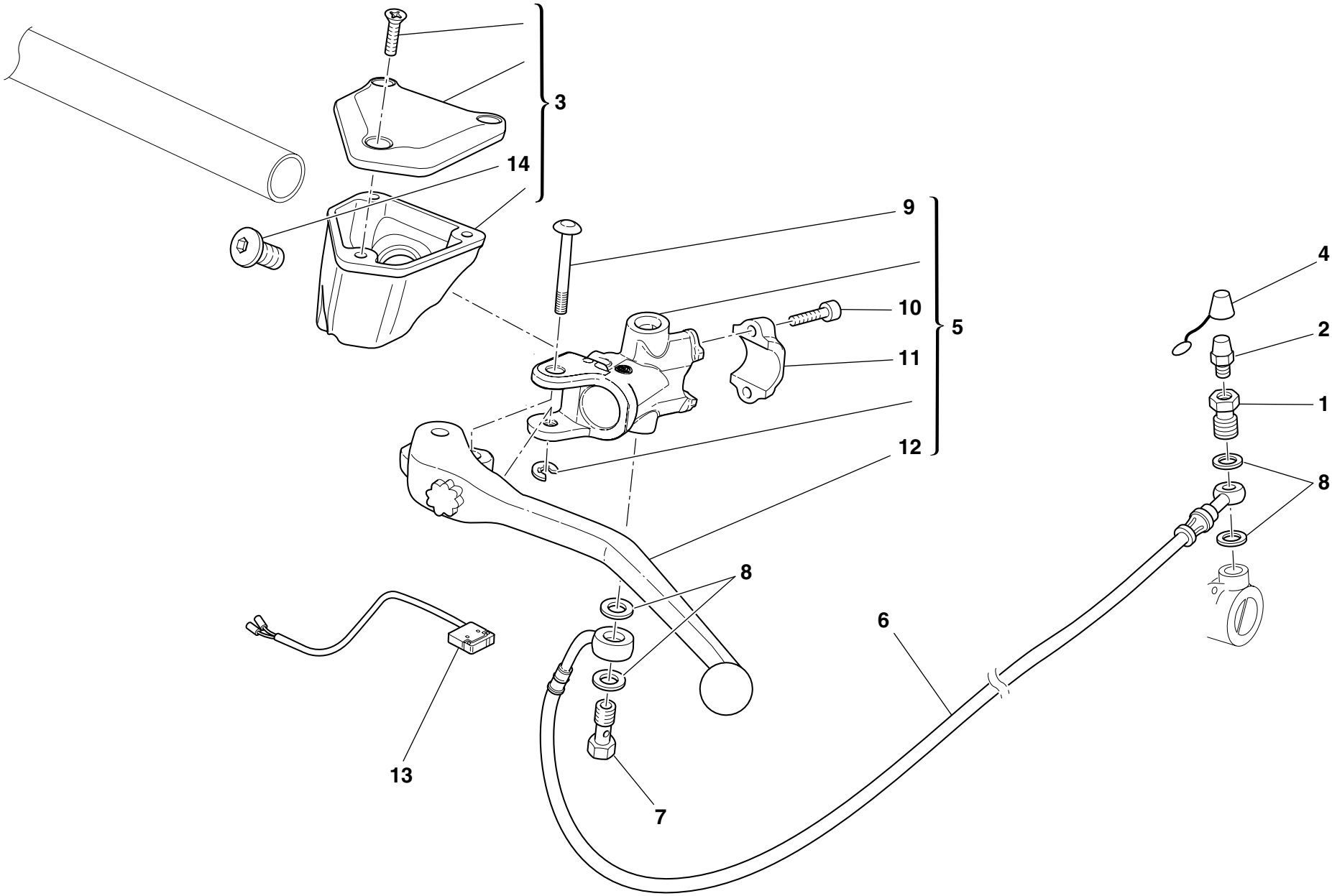

DRAWING **023** **CLUTCH CONTROL**

NOTES	NO.	CODE NO.	DESCRIPTION	VALIDITY	Q.TY
	1	779.1.082.1AB	Special screw		1
	2	0000.33552	Bleed		1
	3	585.4.005.1A	Complete oil tank		1
	4	612.4.005.1A	Dust seal		1
	5	630.4.016.1A	Clutch drive pump		1
	6	632.1.021.1A	Clutch control pipe (METAL PLAITED)		1
	7	779.1.366.1AB	Special screw		1
	8	420.2.001.0A	Gasket th.1		4
	9	626.4.032.1A	Pin		1
	10	771.4.014.1A	Screw		2
	11	626.4.031.1A	Bracket		1
	12	631.4.017.1A	Clutch control lever		1
	13	539.4.036.1A	Microswitch		1
	14	612.4.023.1A	Bleed		1

NOTES	NO.	CODE NO.	DESCRIPTION	VALIDITY	Q.TY

CATALOGUE No: *915.1.204.1A*
ISSUED: *02 - 04*

DRAWING **024** **FRONT HYDRAULIC BRAKE**

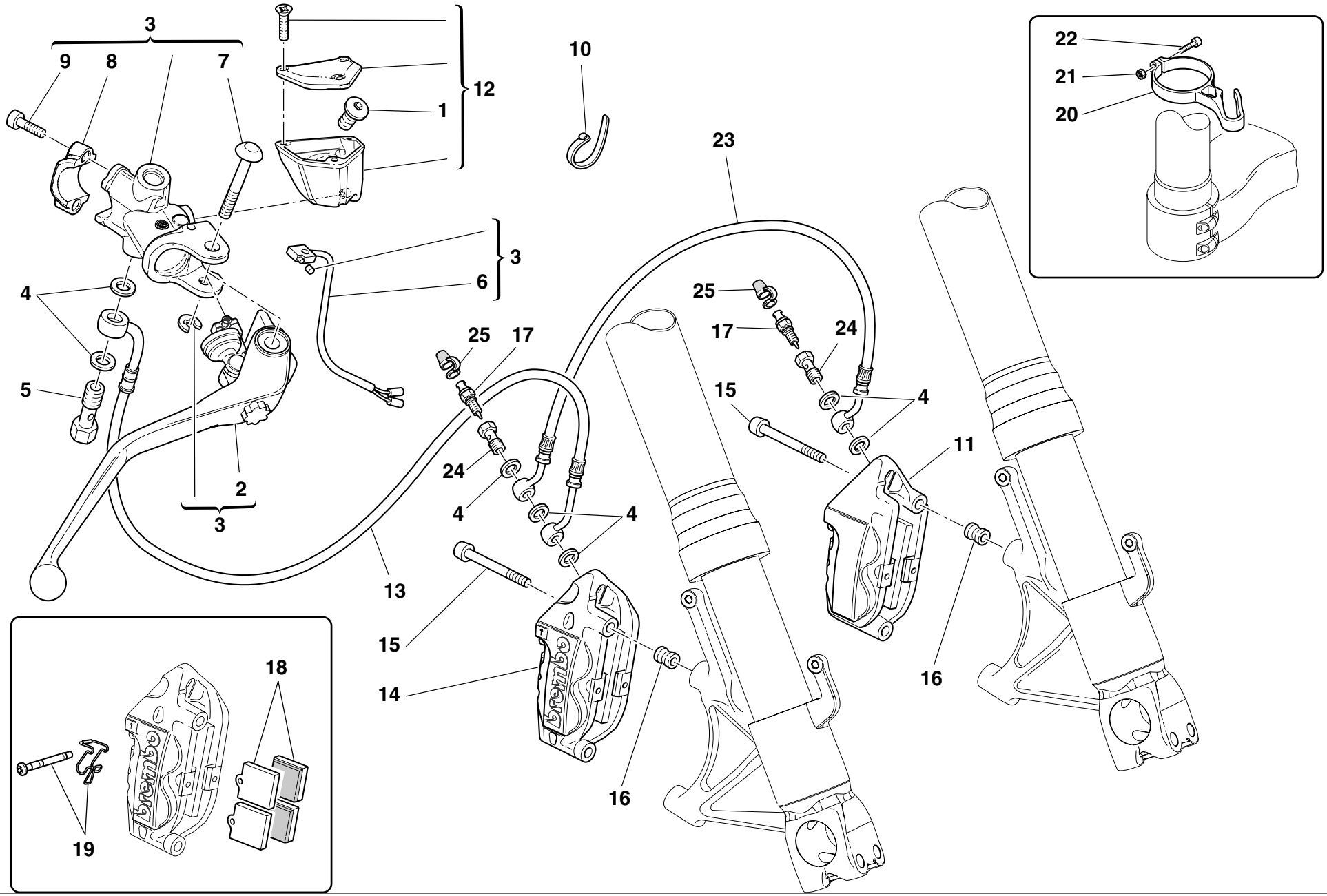

DRAWING **024** **FRONT HYDRAULIC BRAKE**

NOTES	NO.	CODE NO.	DESCRIPTION	VALIDITY	Q.TY
	1	612.4.023.1A	Bleed		1
	2	631.4.019.1A	Brake control lever		1
	3	624.4.027.1A	Front brake pump		1
	4	420.2.001.0A	Gasket th.1		7
	5	779.1.366.1AB	Special screw		1
	6	539.4.035.1A	Microswitch		1
	7	626.4.032.1A	Pin		1
	8	626.4.031.1A	Bracket		1
	9	771.4.014.1A	Screw		2
	10	741.1.012.1A	Hose guide		1
	11	610.4.054.1A	L.H. brake caliper		1
	12	585.4.004.1A	Complete oil tank		1
	13	618.4.052.1A	Front brake line (Ø320)		1
	14	610.4.053.1A	R.H. brake caliper		1
	15	779.1.331.1A	Screw		4
	16	713.1.235.1A	Spacer		4
	17	0000.33552	Bleed		2
	18	613.4.030.1A	Set of 4 pads		2
	19	612.4.022.1A	Spare pins and spring		2
	20	741.1.030.1B	Clamp		1
	21	417.9.020.5A	Nut		1
	22	60N107330	Screw		1
	23	618.4.053.1A	Tube		1
	24	779.1.082.1AB	Special screw		2
	25	612.4.005.1A	Dust seal		2

NOTES	NO.	CODE NO.	DESCRIPTION	VALIDITY	Q.TY

CATALOGUE No: *915.1.204.1A*
ISSUED: *02 - 04*

DRAWING **025** **REAR HYDRAULIC BRAKE**

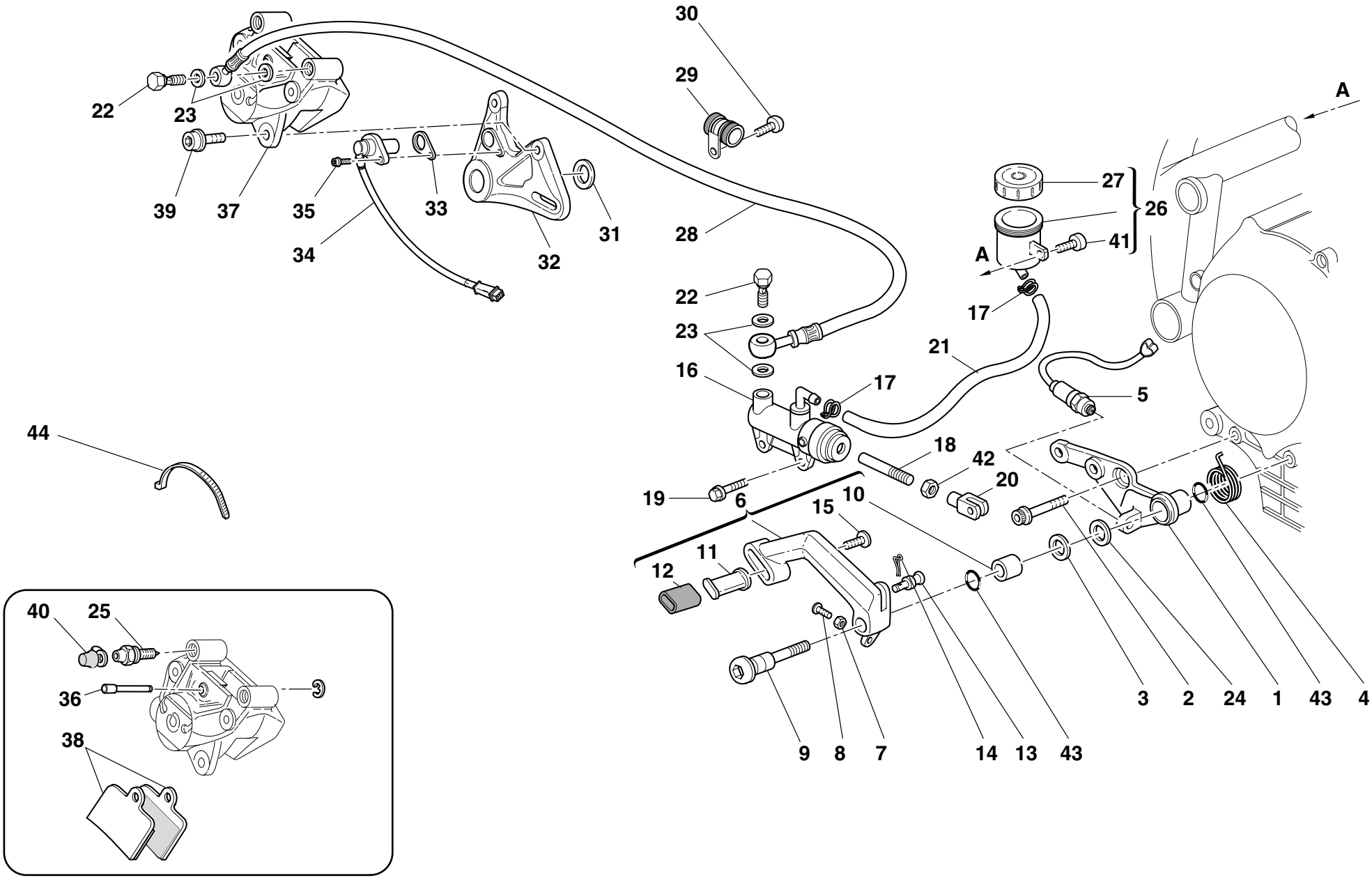

DRAWING **025** **REAR HYDRAULIC BRAKE**

NOTES	NO.	CODE NO.	DESCRIPTION	VALIDITY	Q.TY
	1	829.1.078.1A	Holder		1
	2	771.5.754.8B	Screw		1
	3	852.1.154.1A	Washer		1
	4	799.1.083.1B	Spring		1
	5	539.4.003.1B	Switch		1
	6	457.2.013.1A	Brake control lever		1
	7	747.5.005.1B	Nut		1
	8	779.1.237.1B	Adjusting screw		1
	9	821.1.052.1AB	Pedal pin		1
	10	8000.59056	Bush		1
	11	455.1.010.1A	Brake lever pin		1
	12	764.1.011.1A	Rubber pad		1
	13	821.1.162.1A	Pin		1
	14	685.5.002.1A	Split pin		1
	15	779.1.293.1A	Special screw		1
	16	625.4.009.1A	Rear brake pump		1
	17	741.4.043.1A	Hose guide		2
	18	117.1.044.1A	Adjuster rod		1
	19	772.5.029.1AB	Screw		2
	20	184.1.005.1A	Fork		1
	21	877.1.091.1A	Tube		1
	22	779.1.366.1AB	Special screw		2
	23	420.2.001.0A	Gasket th.1		4
	24	852.1.158.1A	Washer		1
	25	631.4.016.1A	Bleed		1
	26	0000.61078	Complete oil tank		1
	27	893.4.005.1A	Cap		1

NOTES	NO.	CODE NO.	DESCRIPTION	VALIDITY	Q.TY
	28	619.4.024.1A	Rear brake line (METAL PLAITED)		1
	29	741.4.099.1A	Hose guide		3
	30	771.5.639.8B	Screw		3
	31	713.1.205.1A	Inner spacer		1
	32	825.1.028.2A	Caliper holder plate		1
	33	713.1.192.1A	Spacer		1
	34	552.4.037.1A	Sensor		1
	35	771.5.665.8B	Screw		1
	36	612.4.016.1A	Spare pins and spring		2
	37	611.4.020.1A	Rear brake caliper		1
	38	613.4.038.1A	Pads pair		1
	39	771.5.723.8B	Screw		2
	40	612.4.008.1A	Dust seal		1
	41	70700.6N02	Screw		1
	42	747.5.003.1A	Nut		1
	43	230213	O-ring		2
	44	741.4.038.1A	Hose guide		4

CATALOGUE No: *915.1.204.1A*
ISSUED: *02 - 04*

DRAWING **026** **FRONT AND REAR WHEELS**

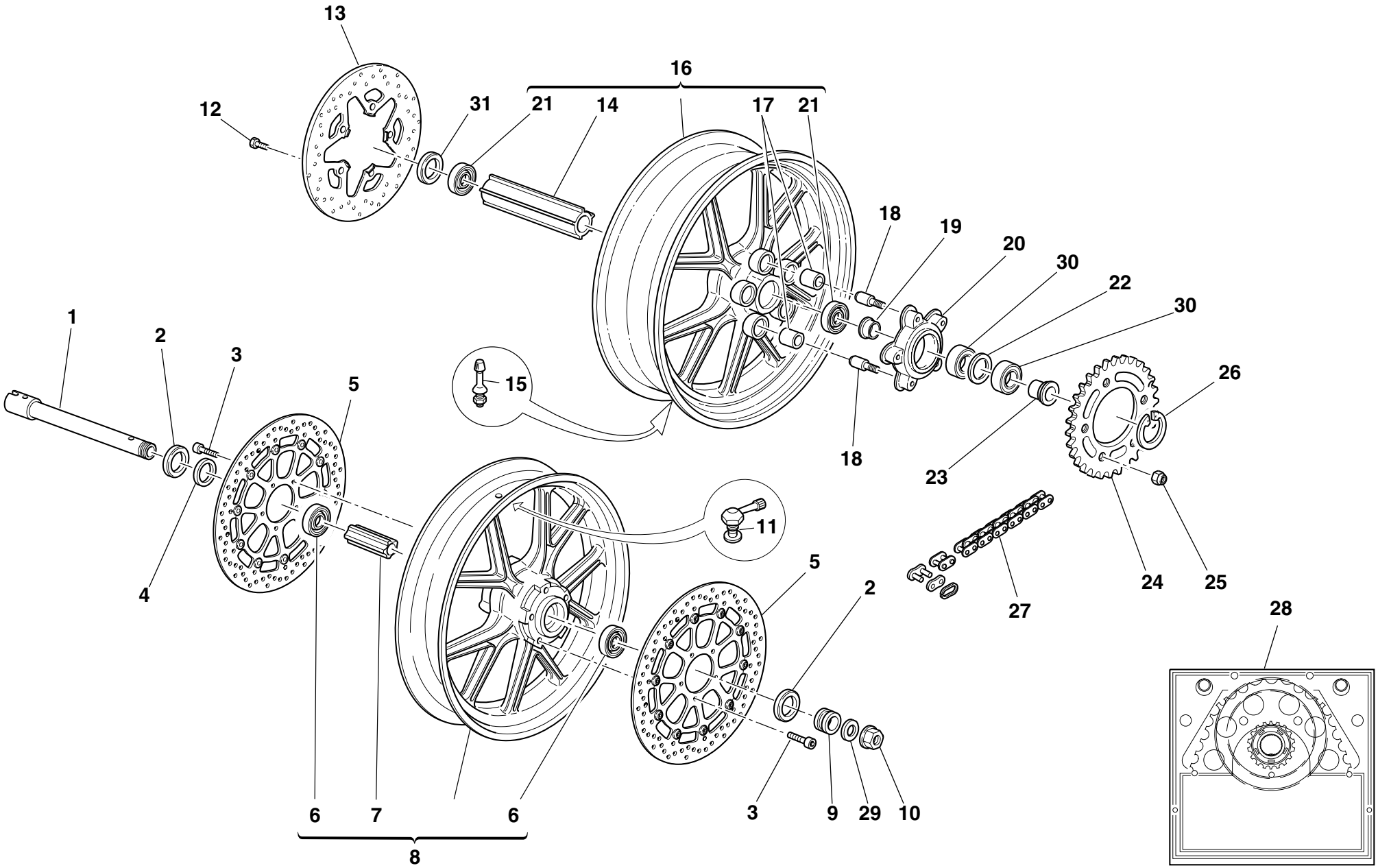

DRAWING **026** **FRONT AND REAR WHEELS**

NOTES	NO.	CODE NO.	DESCRIPTION	VALIDITY	Q.TY
	1	819.1.043.1A	Front wheel spindle		1
	2	930.4.052.1A	Seal ring		2
	3	771.1.021.1A	Screw		10
	4	713.1.196.1A	R.H. spacer		1
	5	492.4.055.1A	Front brake disc ø320		2
	6	75162.2566	Bearing		2
	7	714.1.047.1A	Inner spacer		1
	8	501.2.102.1AB	Front wheel rim (BLACK)		1
	9	713.1.197.1A	L.H. spacer		1
	10	748.1.014.1A	Nut		1
	11	497.2.001.2A	Valve		1
	12	779.1.311.1A	Screw		5
	13	492.4.047.1A	Rear brake disc		1
	14	714.1.057.1A	Inner spacer		1
	15	0803.77.010	Valve		1
	16	502.2.102.1AB	Rear wheel rim (BLACK)		1
	17	700.1.005.1A	Vibration damper		5
	18	821.1.135.2A	Pin		5
	19	710.1.084.1A	Bush		1
	20	160.1.092.2A	Rear sprocket flange		1
	21	75162.3075	Bearing		2
	22	713.1.184.1A	Inner spacer		1
	23	713.1.186.1A	Spacer		1
	24	494.1.102.1A	Ring gear z=35		1
	25	748.4.024.1AB	Nut		5
	26	884.4.006.1A	Circlip		1
	27	676.4.037.1A	Chain 95+1		1

NOTES	NO.	CODE NO.	DESCRIPTION	VALIDITY	Q.TY
	28	676.2.053.1A	Final drive kit		1
	29	8000.70119	Washer		1
	30	702.4.038.1A	Bearing		2
	31	930.4.039.1A	Seal ring		1

CATALOGUE No: *915.1.204.1A*
ISSUED: *02 - 04*

DRAWING **027** **REAR FRAME(mon)**

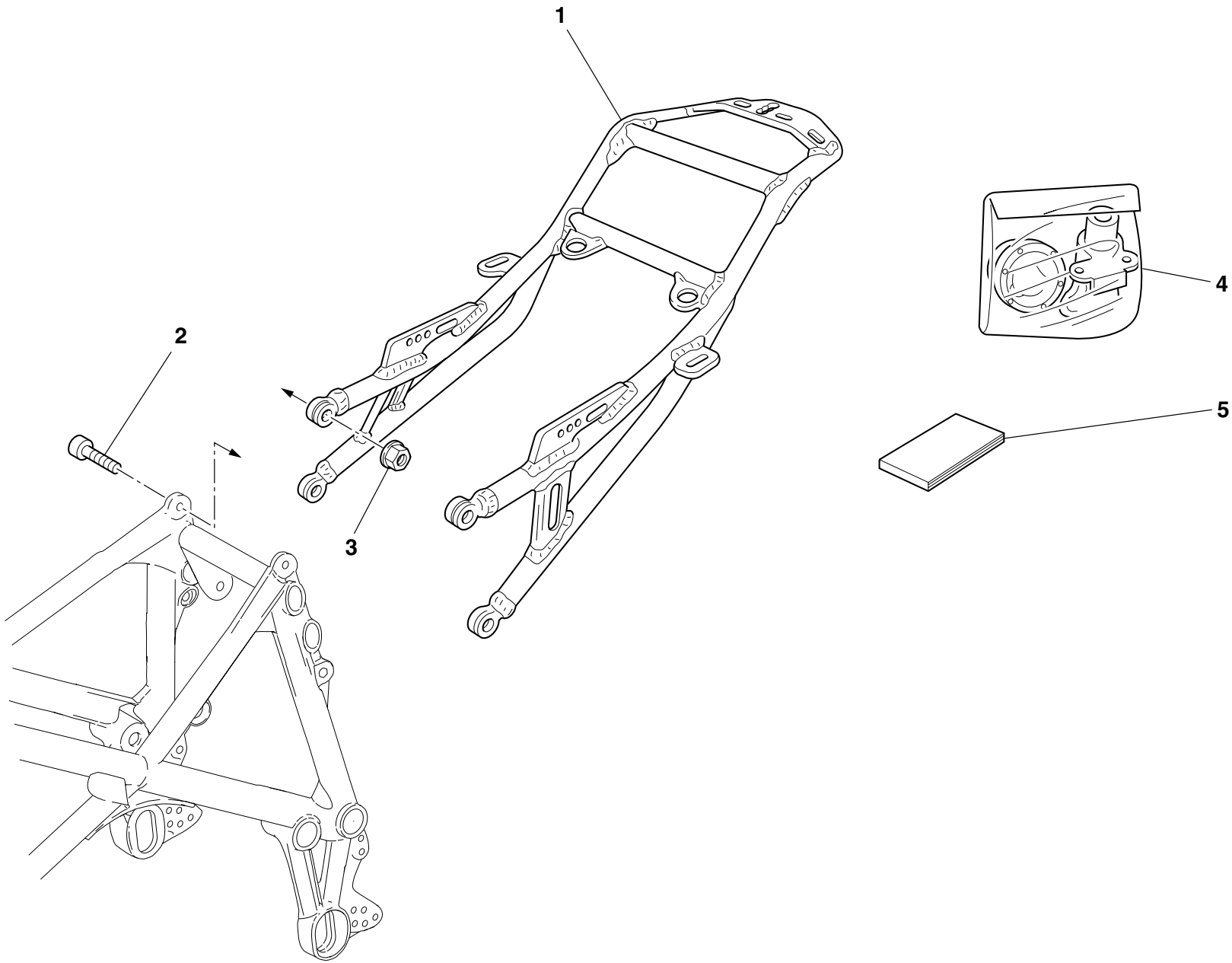

DRAWING **027** **REAR FRAME(mon)**

NOTES	NO.	CODE NO.	DESCRIPTION	VALIDITY	Q.TY
	1	471.1.009.1BW	Rear frame (mon)		1
	2	771.4.011.1AB	Screw		4
	3	748.4.035.1A	Nut		4
	4	598.2.031.1D	Locks kit		1
	5	913.7.091.1A	Owner's manual		1

NOTES	NO.	CODE NO.	DESCRIPTION	VALIDITY	Q.TY

CATALOGUE No: *915.1.204.1A*
ISSUED: *02 - 04*

DRAWING **027a** **NUMBER PLATE HOLDER**

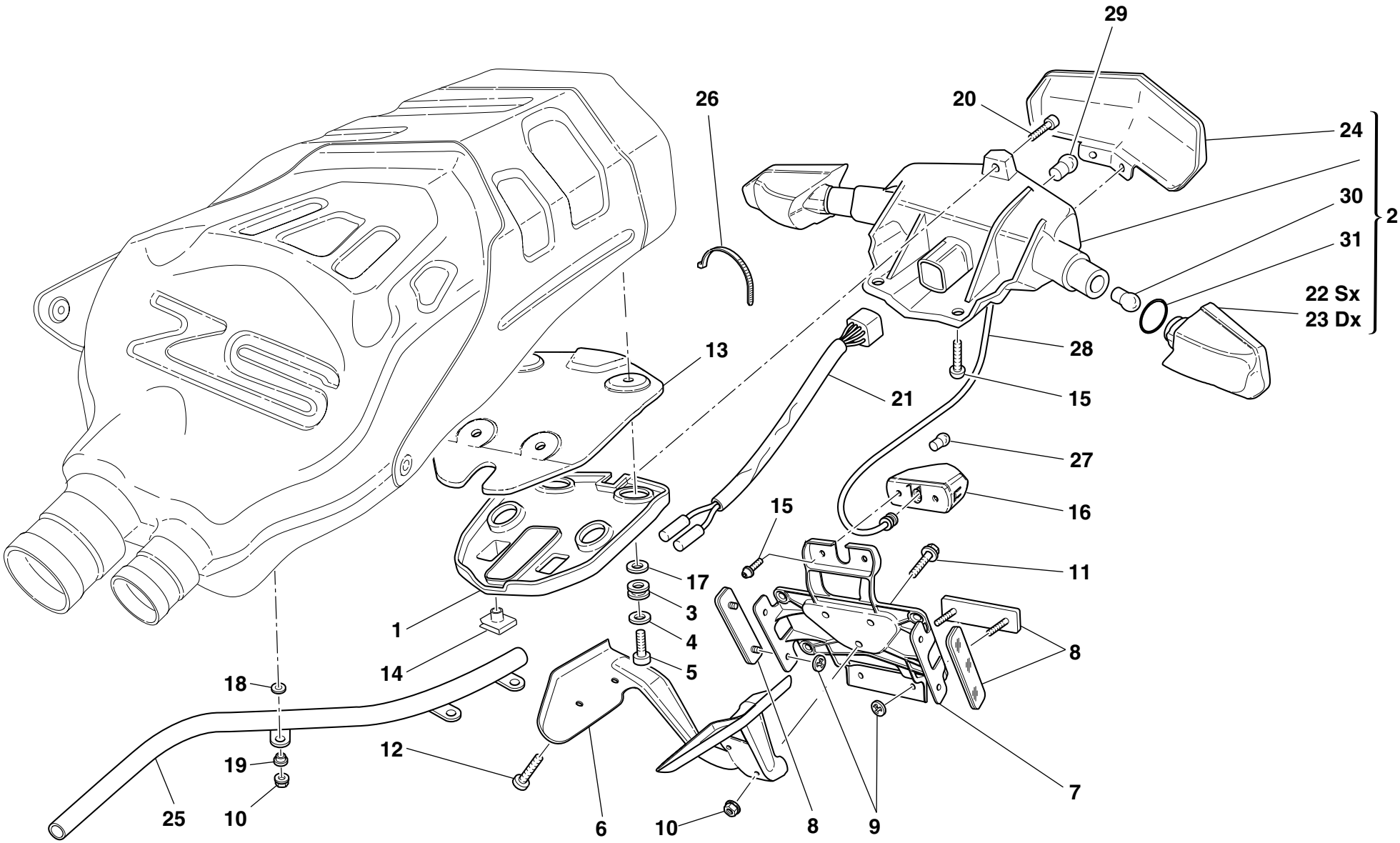

DRAWING **027a** **NUMBER PLATE HOLDER**

NOTES	NO.	CODE NO.	DESCRIPTION	VALIDITY	Q.TY
	1	525.1.013.1A	Headlight holder		1
	2	525.1.012.1A	Tail light		1
	3	764.1.064.1A	Vibration damper pad		4
	4	852.1.148.1B	Washer		4
	5	779.1.279.1C	Screw		4
	6	830.1.263.2A	Bracket		1
	7	561.1.024.1A	Holder		1
	8	529.1.010.1A	Cat's eye		3
	9	850.4.052.1A	Quik fastening		6
	10	748.1.036.1A	Nut		6
	11	772.5.032.1A	Screw		3
	12	775.1.018.1A	Screw		4
	13	460.1.119.1A	Taillight heat guard		1
	14	850.4.047.1A	Quik fastening		3
	15	775.1.029.1A	Screw		4
	16	525.1.019.1A	Number plate light		1
	17	852.1.162.1A	Washer		4
	18	856.1.023.1A	Washer		3
	19	716.1.108.1A	Spacer		3
	20	775.1.017.1A	Screw		1
	21	510.1.242.1A	Wiring		1
	22	531.1.002.1A	LH rear indicator body		1
	23	531.1.001.1A	RH rear indicator body		1
	24	525.1.014.1A	Taillight glass		1
	25	877.1.090.1A	Wiring protection		1
	26	0691.91.030	Hose guide		1
	27	8000.36230	Bulb		1

NOTES	NO.	CODE NO.	DESCRIPTION	VALIDITY	Q.TY
	28	510.1.296.1A	Plate light wiring		1
	29	390.4.003.1A	Two-light bulb 12V 5/21W		1
	30	8000.36726	Bulb		2
	31	886.5.042.1A	O-ring		2

CATALOGUE No: *915.1.204.1A*
ISSUED: *02 - 04*

DRAWING **028** **REAR SUSPENSION**

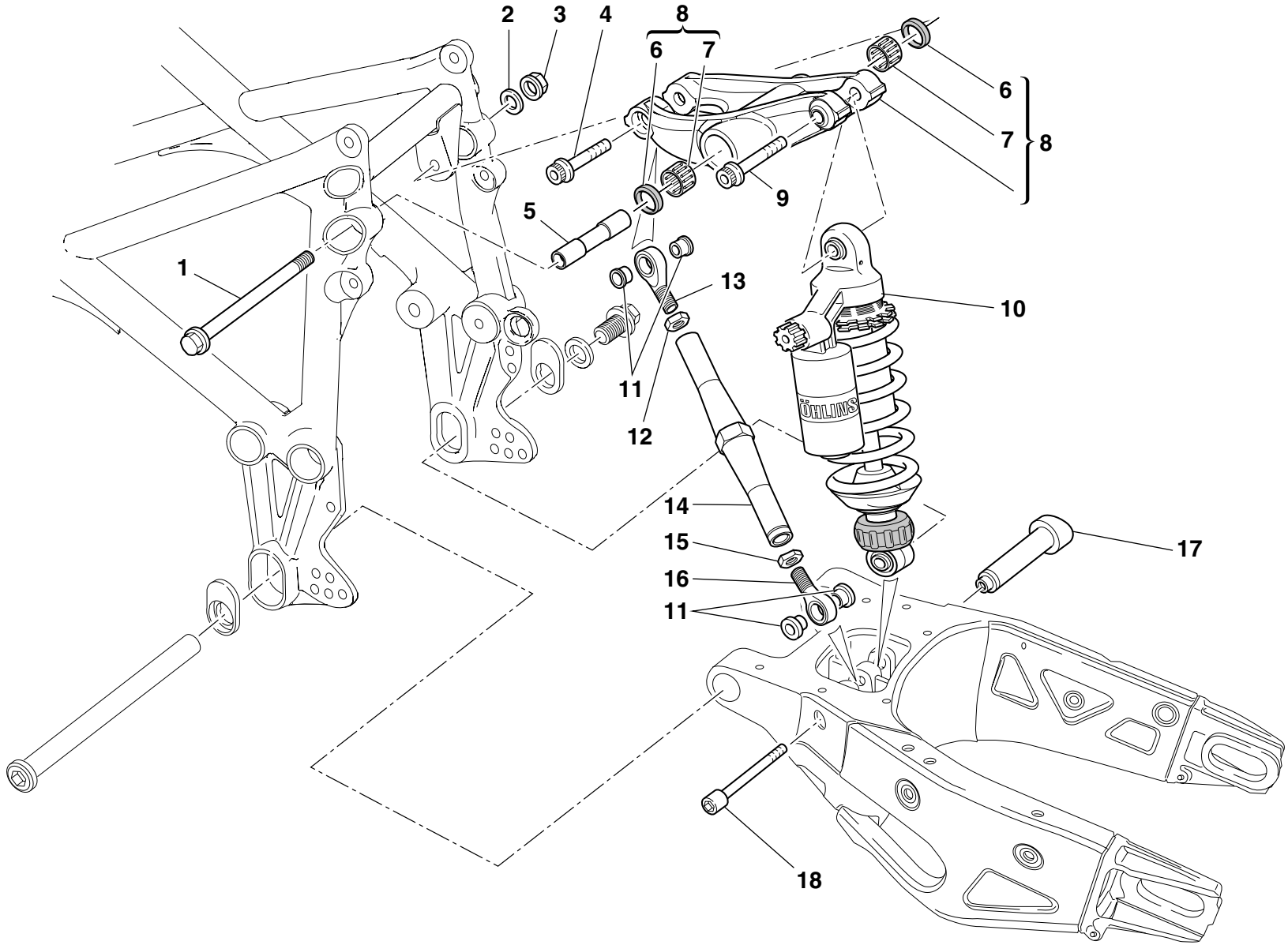

DRAWING **028** **REAR SUSPENSION**

NOTES	NO.	CODE NO.	DESCRIPTION	VALIDITY	Q.TY
	1	771.1.031.1A	Screw		1
	2	713.1.239.1A	Washer		1
	3	748.4.037.1AB	Nut		1
	4	771.5.937.8B	Screw		1
	5	715.1.003.1A	Spacer		1
	6	930.4.011.1A	Seal ring		2
	7	701.4.004.1A	Needle bearing		2
	8	372.2.017.1A	Rocker assembly		1
	9	771.5.938.8B	Screw		1
	10	365.2.051.1C	Shock absorber (monoposto)		1
	11	710.1.025.1A	Bush		4
	12	750.1.021.1A	Nut		1
	13	76401.0010	Ball joint		1
	14	875.1.099.1A	Tie rod		1
	15	750.1.022.1A	Nut		1
	16	76401.0009	Ball joint		1
	17	750.1.112.1A	Bush		1
	18	771.1.016.1A	Screw		1

NOTES	NO.	CODE NO.	DESCRIPTION	VALIDITY	Q.TY

CATALOGUE No: *915.1.204.1A*
ISSUED: *02 - 04*

DRAWING **028a** **REAR FORK**

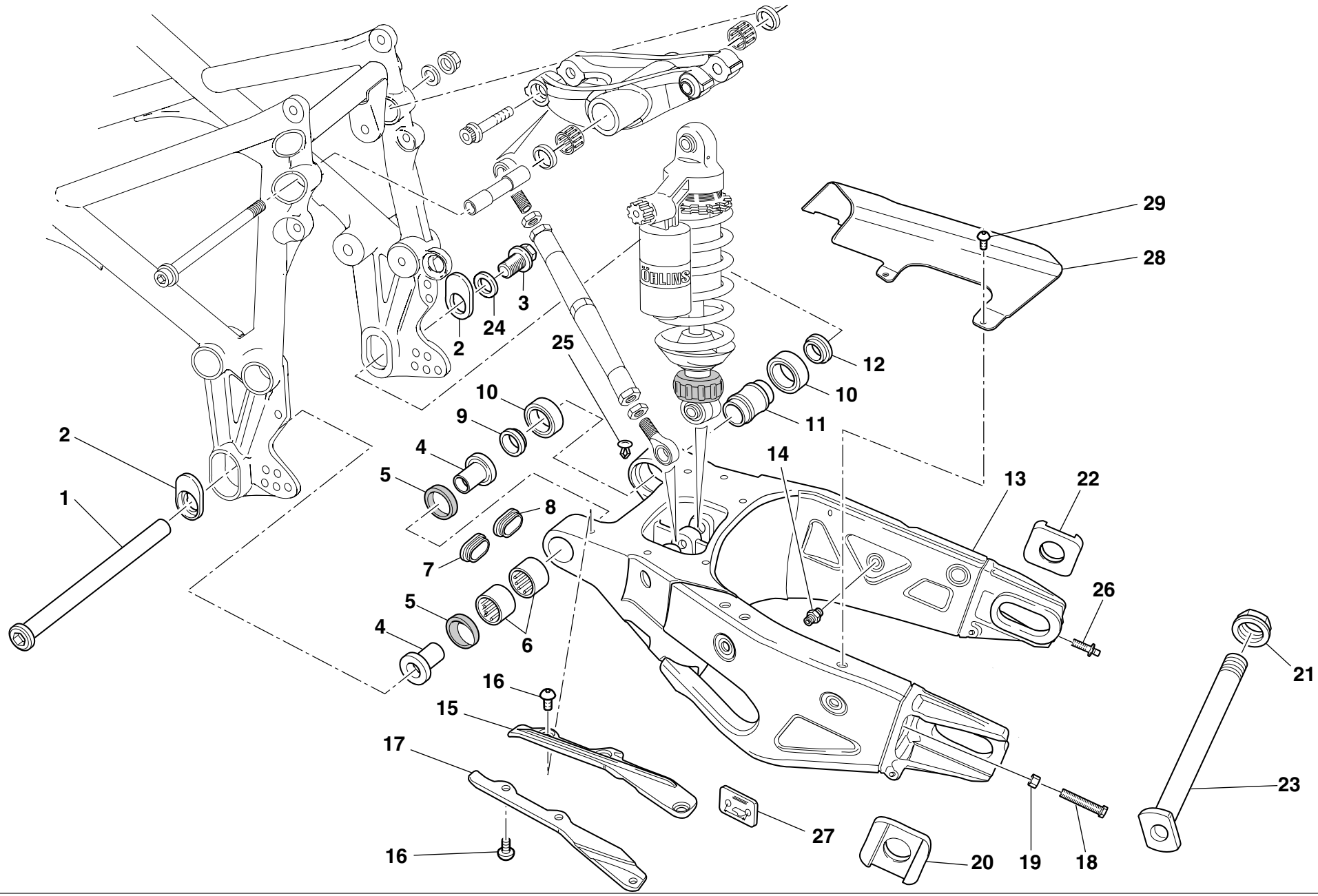

DRAWING **028a** **REAR FORK**

NOTES	NO.	CODE NO.	DESCRIPTION	VALIDITY	Q.TY
	1	369.1.010.1A	Swingarm pivot		1
	2	756.1.007.1A	Eccentric		2
	3	772.1.028.1A	Screw		1
	4	710.1.090.1A	Bush		2
	5	0412.02.295	Seal ring		2
	6	76400.0001	Needle bearing		2
	7	872.1.016.1A	Cap		1
	8	872.1.042.1A	L.H. cap		1
	9	712.1.029.1A	R.H. spacer		1
	10	75162.2566	Bearing		2
	11	713.1.187.1A	Spacer		1
	12	712.1.030.1A	R.H. spacer		1
	13	370.1.044.1A	Swingarm		1
	14	832.1.026.1A	Pin		1
	15	447.1.056.1A	Lower chain sliding shoe		1
	16	775.1.008.3A	Screw		6
	17	447.1.055.1A	Upper chain sliding shoer		1
	18	779.1.373.1A	Special screw		2
	19	750.1.125.1A	Nut		2
	20	373.1.045.1A	LH chain slider		1
	21	750.1.061.1A	Nut		1
	22	373.1.046.1A	RH chain slider		1
	23	819.1.040.1A	Rear wheel spindle		1
	24	852.1.068.1A	Washer		1
	25	872.4.044.1A	Cap		2
	26	779.1.372.1A	Special screw		2
	27	433.1.315.1A	Chain adjustment sticker		1

NOTES	NO.	CODE NO.	DESCRIPTION	VALIDITY	Q.TY
	28	446.1.011.1A	Chain guard (CARBON)		1
	29	775.1.020.1A	Screw		3

CATALOGUE No: *915.1.204.1A*
ISSUED: *02 - 04*

DRAWING **029** **AIR INDUCTION-OIL VENT**

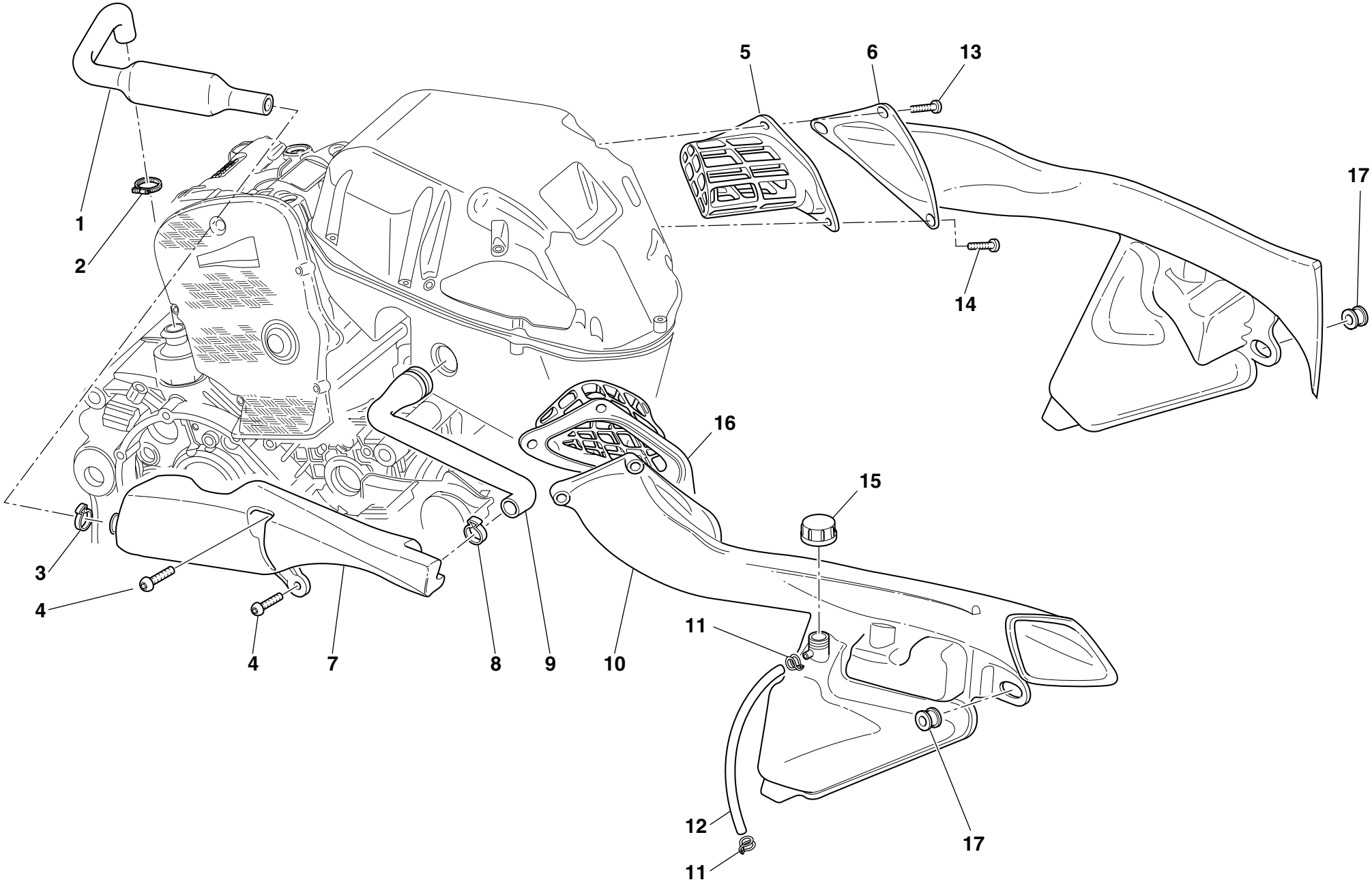

DRAWING **029** **AIR INDUCTION-OIL VENT**

NOTES	NO.	CODE NO.	DESCRIPTION	VALIDITY	Q.TY
	1	876.2.003.1A	Tube		1
	2	741.5.033.1B	Hose guide		1
	3	8000.50454	Hose guide		1
	4	775.1.008.3A	Screw		2
	5	426.2.016.1A	LH air filter assembly		1
	6	484.1.041.1A	L.H. air manifold		1
	7	585.1.034.1A	Oil breather tank		1
	8	8000.50450	Hose guide		1
	9	876.2.004.1A	Breather pipe		1
	10	484.1.042.1A	R.H. air manifold		1
	11	741.1.029.1A	Hose guide		2
	12	934.1.003.2A	Tube		1
	13	772.1.043.1A	Screw		4
	14	772.1.042.1A	Screw		2
	15	0000.40427	Tank cap		1
	16	426.2.017.1A	RH air filter assembly		1
	17	764.1.056.1A	Rubber pad		2

NOTES	NO.	CODE NO.	DESCRIPTION	VALIDITY	Q.TY

CATALOGUE No: *915.1.204.1A*
ISSUED: *02 - 04*

DRAWING **030** **WATER RADIATOR ASSY**

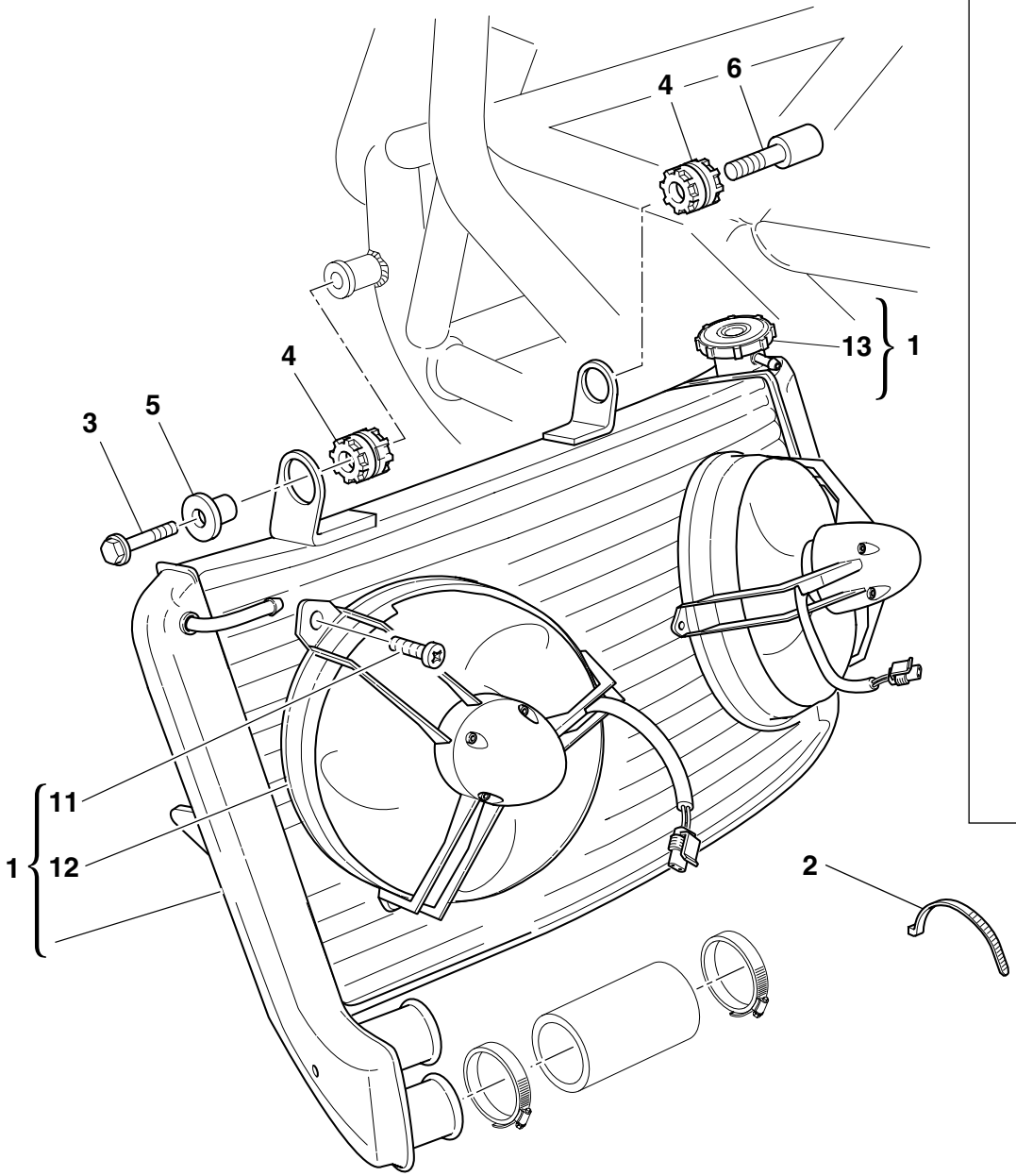

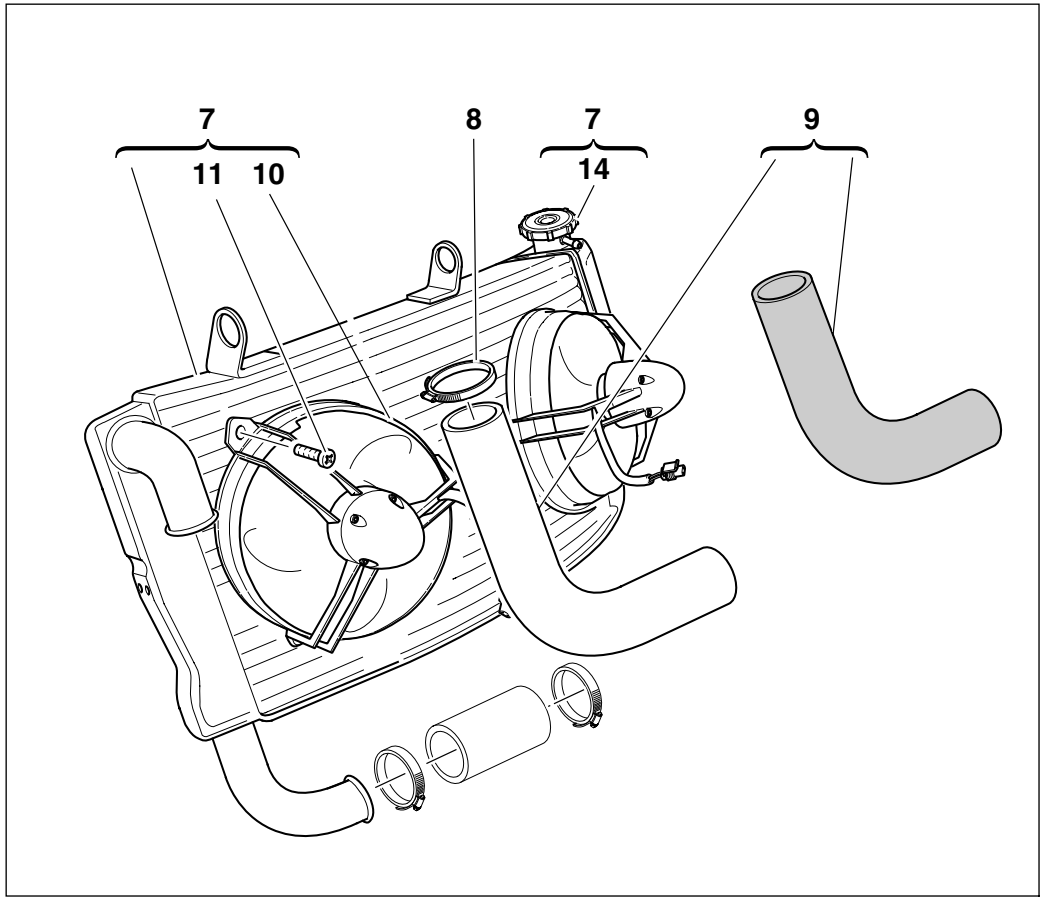

DRAWING **030** **WATER RADIATOR ASSY**

NOTES	NO.	CODE NO.	DESCRIPTION	VALIDITY	Q.TY
	1	548.4.040.1A	Water radiator		1
	2	741.4.038.1A	Hose guide		2
	3	772.5.033.1AB	Screw		1
	4	764.1.022.1A	Vibration damper pad		2
	5	0000.62652	Spacer		1
	6	779.1.301.1AB	Special screw		1
	7	548.4.041.1A	Water radiator		1
	8	741.4.025.1A	Hose guide		1
	9	800.2.121.1A	Hose		1
	10	550.4.012.1A	Electric fan		2
	11	779.4.076.1A	Screw		6
	12	550.4.013.1A	Electric fan		2
	13	893.4.006.1A	Radiator cap		1
	14	893.1.003.1A	Radiator cap		1

NOTES	NO.	CODE NO.	DESCRIPTION	VALIDITY	Q.TY

CATALOGUE No: *915.1.204.1A*
ISSUED: *02 - 04*

DRAWING **031** **COOLING CIRCUIT**

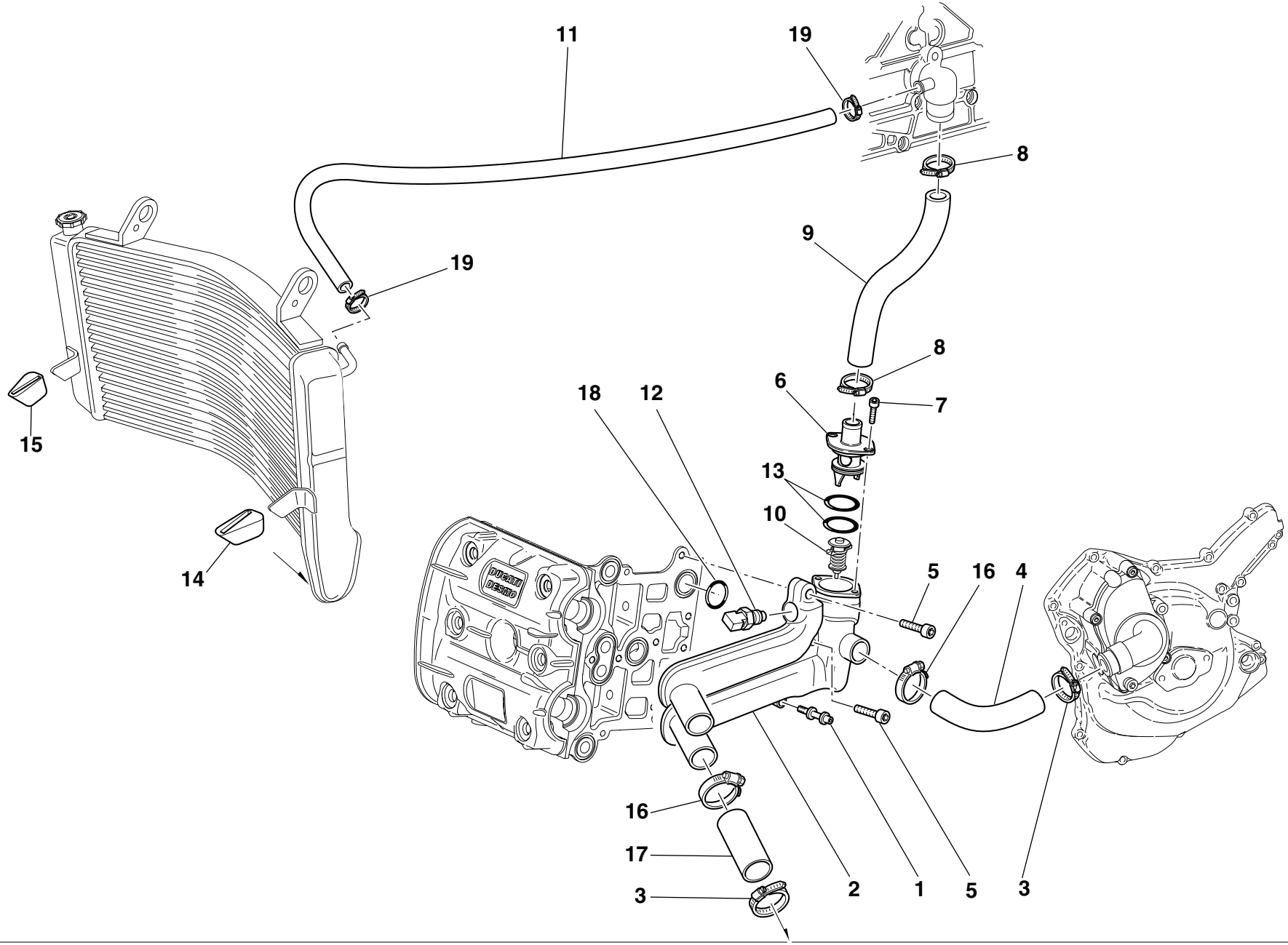

DRAWING **031** **COOLING CIRCUIT**

NOTES	NO.	CODE NO.	DESCRIPTION	VALIDITY	Q.TY
	1	779.1.261.1A	Screw		1
	2	616.1.009.2A	Distributor body		1
	3	741.4.025.1A	Hose guide		2
	4	800.1.112.1A	Hose		1
	5	771.5.072.8B	Screw		2
	6	616.1.007.2A	Cap		1
	7	771.5.064.8B	Screw		2
	8	741.4.002.1A	Hose guide		2
	9	800.1.083.1A	Thermostat/pump hose		1
	10	553.4.005.1A	Valve		1
	11	934.1.004.1A	Breather pipe		1
	12	552.4.013.1A	Sensor		1
	13	886.4.048.1A	O-ring		2
	14	764.1.041.1A	Rubber pad		1
	15	764.1.045.1A	Rubber pad		1
	16	741.4.101.1A	Hose guide		2
	17	800.1.113.1A	Hose		2
	18	93823.2087	O-ring		1
	19	741.5.011.1C	Hose guide		2

NOTES	NO.	CODE NO.	DESCRIPTION	VALIDITY	Q.TY

CATALOGUE No: *915.1.204.1A*
ISSUED: *02 - 04*

DRAWING **032** **FUEL TANK**

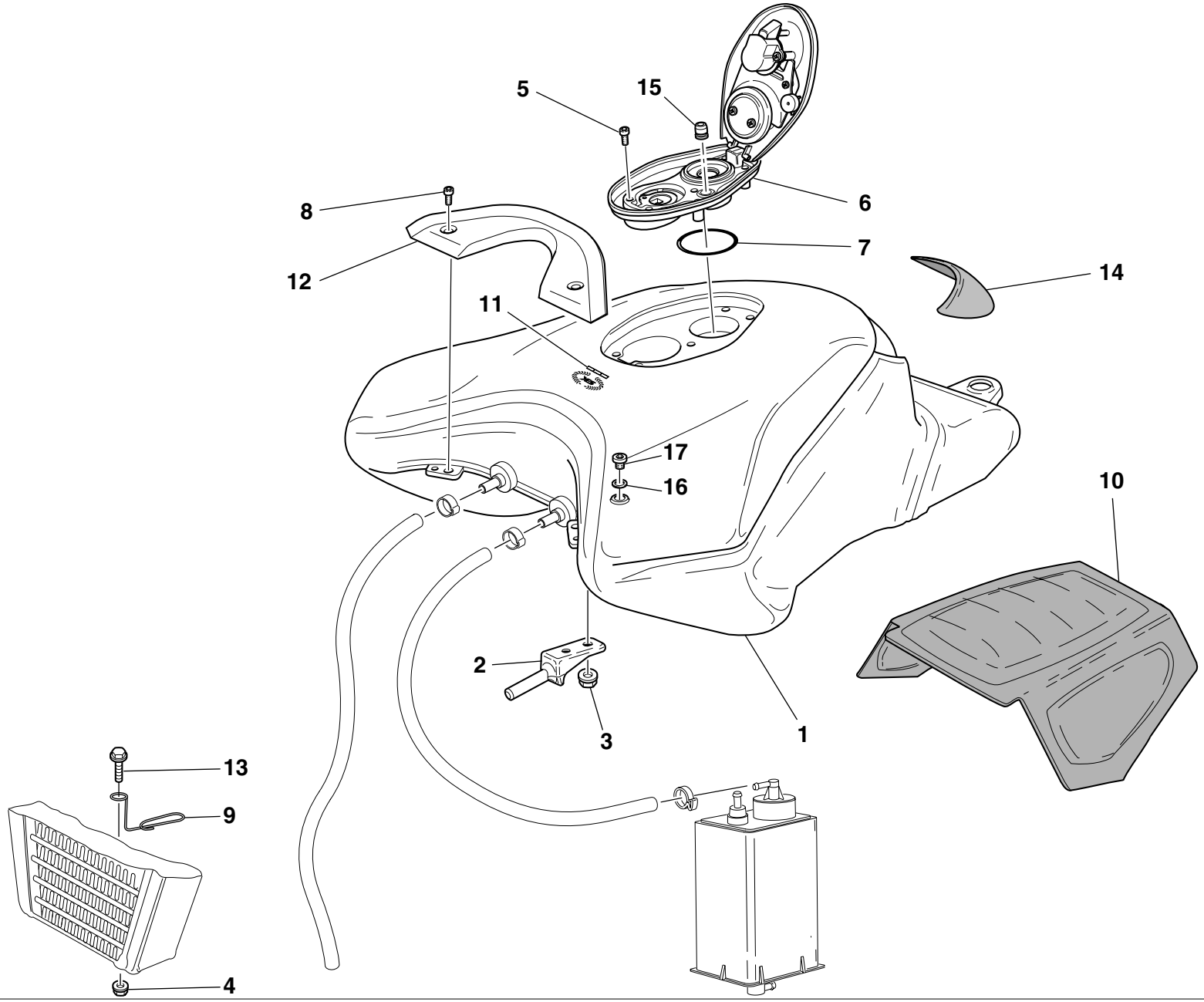

DRAWING **032** **FUEL TANK**

NOTES	NO.	CODE NO.	DESCRIPTION	VALIDITY	Q.TY
	1	586.1.058.1AA	Fuel tank (RED)		1
	2	587.1.049.1A	Tank front connection		2
	3	750.5.001.1A	Nut		4
	4	749.4.004.1A	Nut		1
	5	775.1.017.1A	Screw		5
	6	895.2.003.1A	Tank cap		1
	7	886.4.055.1A	O-ring		1
	8	775.1.033.1A	Screw		2
	9	881.1.040.1A	Ring		1
	10	486.1.068.1A	Panel		1
	11	438.1.357.1AB	Sticker ”alloro Ducati”		1
	12	247.1.197.1A	Cover		1
	13	772.5.029.1AB	Screw		1
	14	723.1.006.2A	Cap		1
	15	791.1.012.1A	Gasket		1
	16	420.2.001.0A	Gasket th.1		1
	17	873.1.060.1A	Cap		1

NOTES	NO.	CODE NO.	DESCRIPTION	VALIDITY	Q.TY

CATALOGUE No: *915.1.204.1A*
ISSUED: *02 - 04*

DRAWING **032a** **FUEL SYSTEM**

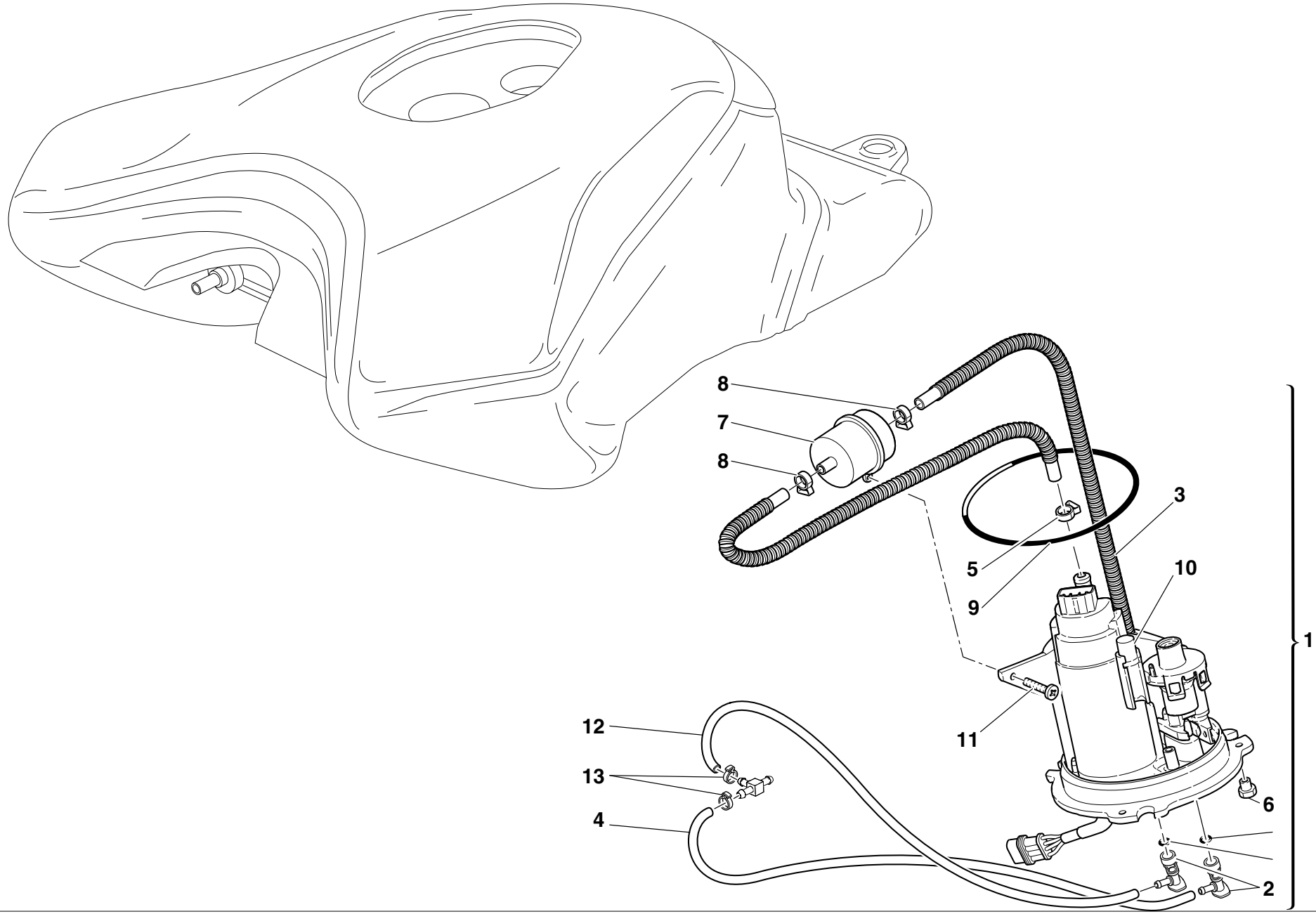

DRAWING **032a** **FUEL SYSTEM**

NOTES	NO.	CODE NO.	DESCRIPTION	VALIDITY	Q.TY
	1	160.2.362.2A	Complete flange		1
	2	814.4.010.1A	Quick-coupling union		2
	3	590.1.195.1A	Tube		1
	4	590.1.198.1A	Fuel pipe (Delivery)		1
	5	741.4.092.1A	collar		1
	6	750.1.115.1A	Nut		3
	7	425.4.010.1A	Filter		1
	8	741.4.093.1A	collar		3
	9	886.5.033.1A	O-ring		1
	10	552.4.048.1A	Thermistor		1
	11	774.5.006.1A	Self-tapping screw		1
	12	590.1.199.1A	Fuel pipe (Return)		1
	13	287.4.024.1B	Hose guide		2

NOTES	NO.	CODE NO.	DESCRIPTION	VALIDITY	Q.TY

CATALOGUE No: *915.1.204.1A*
ISSUED: *02 - 04*

DRAWING **033** **SEAT**

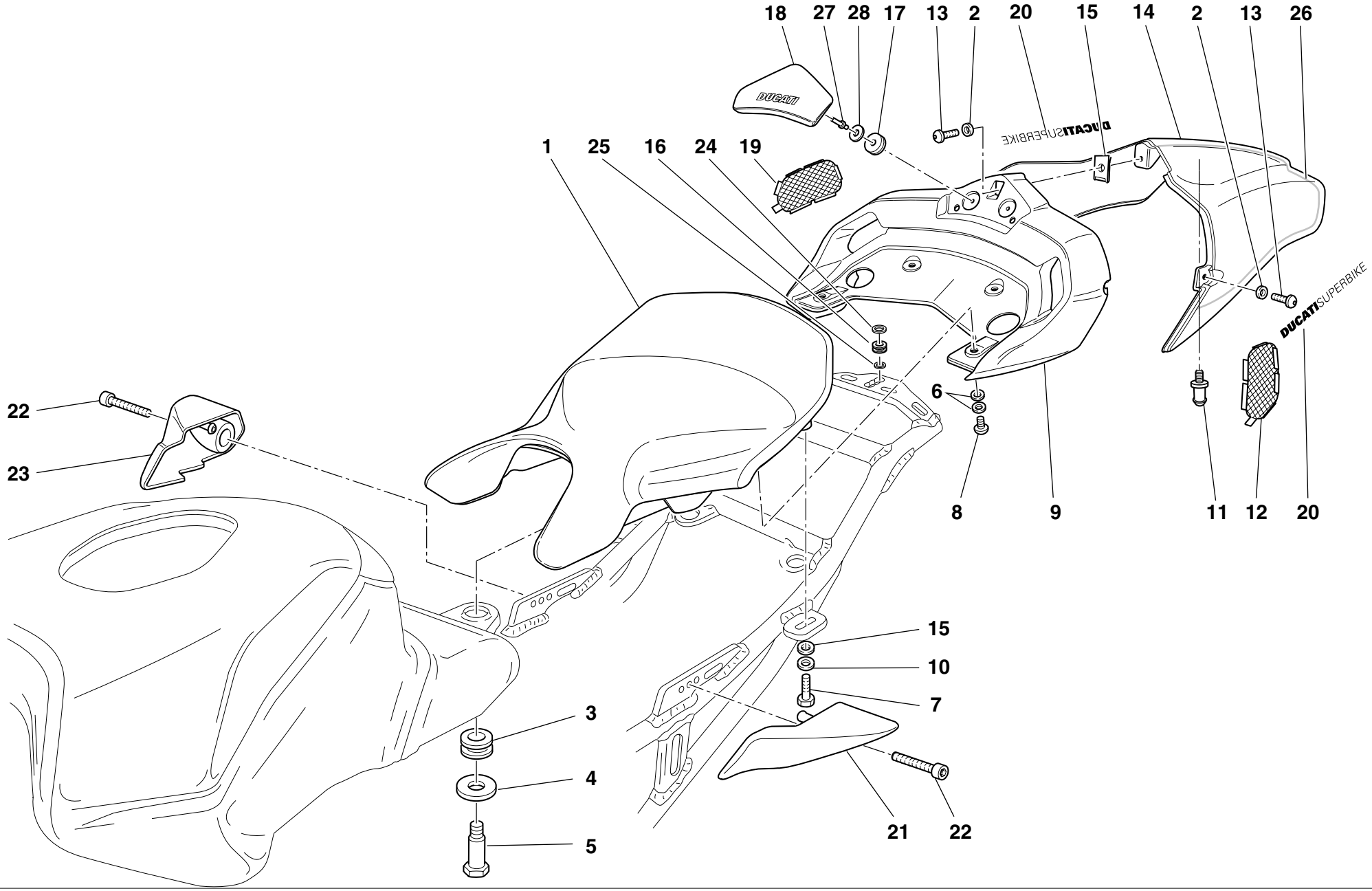

DRAWING **033** **SEAT**

NOTES	NO.	CODE NO.	DESCRIPTION	VALIDITY	Q.TY
	1	595.1.052.1A	Seat		1
	2	856.4.002.1A	Washer		3
	3	700.1.041.1A	Bush		1
	4	856.1.087.1A	Washer		1
	5	779.1.282.1A	Special screw		1
	6	852.1.071.1A	Washer		8
	7	771.5.067.2BB	Screw		2
	8	775.1.008.3A	Screw		4
	9	483.1.035.1AA	Tail section secured under the seat (RED)		1
	9	483.3.035.1A	Tail section secured under the seat		1
	10	852.5.009.1A	Washer		2
	11	832.1.027.1B	Pin		1
	12	460.1.124.1A	Net		1
	13	775.1.017.1A	Screw		3
	14	483.1.047.1AA	Single-seater tail guard (RED)		1
	14	483.3.037.1A	Single-seater tail guard		1
	15	853.5.003.1A	Washer		2
	16	764.1.067.1A	Rubber pad		1
	17	850.1.014.1A	Rubber pad		2
	18	595.1.055.1A	Seat back		1
	19	460.1.123.1A	Net		1
	20	438.1.240.1AB	Sticker "DUCATI SUPERBIKE" (GREY)		2
	21	806.1.016.1A	L.H. handle		1
	22	779.1.286.2A	Screw		2
	23	806.1.015.1A	R.H. handle		1
	24	852.4.170.1A	Washer		1
	25	852.1.166.1A	Washer		1

NOTES	NO.	CODE NO.	DESCRIPTION	VALIDITY	Q.TY
	26	437.1.132.1AA	Sticker		2
	27	736.4.012.1A	Shear rivet		2
	28	852.1.075.1A	Washer		2

CATALOGUE No: *915.1.204.1A*
ISSUED: *02 - 04*

DRAWING **034** **HEADLIGHT FAIRING**

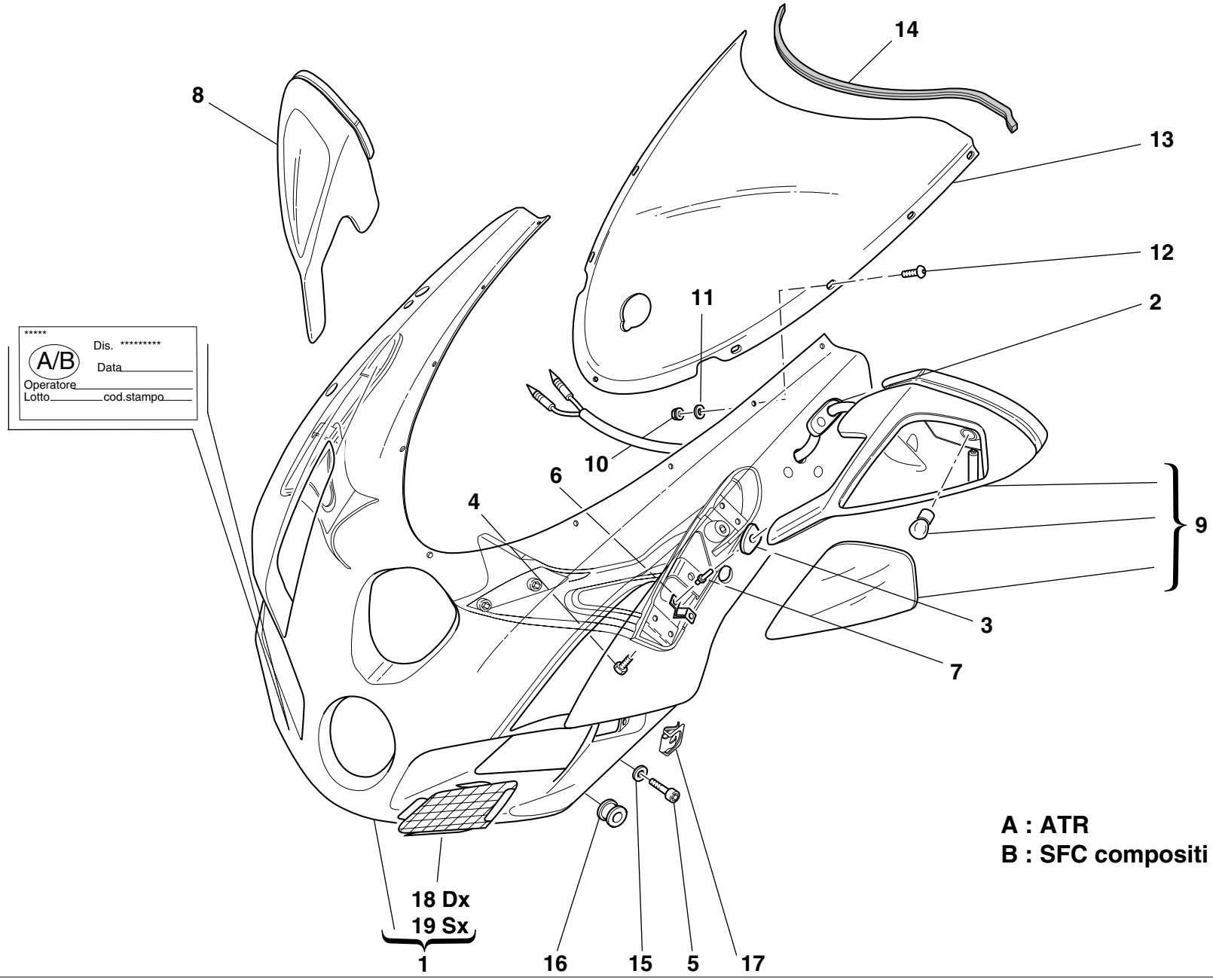

DRAWING **034** **HEADLIGHT FAIRING**

NOTES	NO.	CODE NO.	DESCRIPTION	VALIDITY	Q.TY
	1	481.1.030.1AA	Headlight fairing (RED)		1
	1	481.1.030.2AA	Headlight fairing (RED)		1
	1	481.3.030.1A	Headlight fairing (CARBON) - (A)		1
	1	481.3.030.2A	Headlight fairing (CARBON) - (B)		1
	2	764.1.059.1A	Rearview mirror rear rubber		1
	3	764.1.047.1A	Rearview mirror front rubber		1
	4	779.1.283.1A	Screw		2
	5	772.1.041.1A	Screw		2
	6	8000.66336	Spring		4
	7	736.4.012.1A	Shear rivet		8
	8	523.2.009.1AA	R.H. rear-view mirror (RED)		1
	9	523.2.010.1AA	L.H. rear-view mirror (RED)		1
	10	750.1.028.1A	Nut		9
	11	852.1.024.1A	Nylon washer		9
	12	775.1.007.1AB	Special screw		9
	13	487.2.028.2A	Windshield		1
	14	764.1.060.1A	Windscreen protection rubber		1
	15	852.1.156.1A	Spring washer		2
	16	0797.72.068	Vibration damper pad		2
	17	850.4.049.1A	Quik fastening		2
	18	460.1.148.1A	R.H. protection (CARBON)		1
	19	460.1.149.1A	L.H. protection (CARBON)		1

NOTES	NO.	CODE NO.	DESCRIPTION	VALIDITY	Q.TY

CATALOGUE No: *915.1.204.1A*
ISSUED: *02 - 04*

DRAWING **034a** **FAIRING**

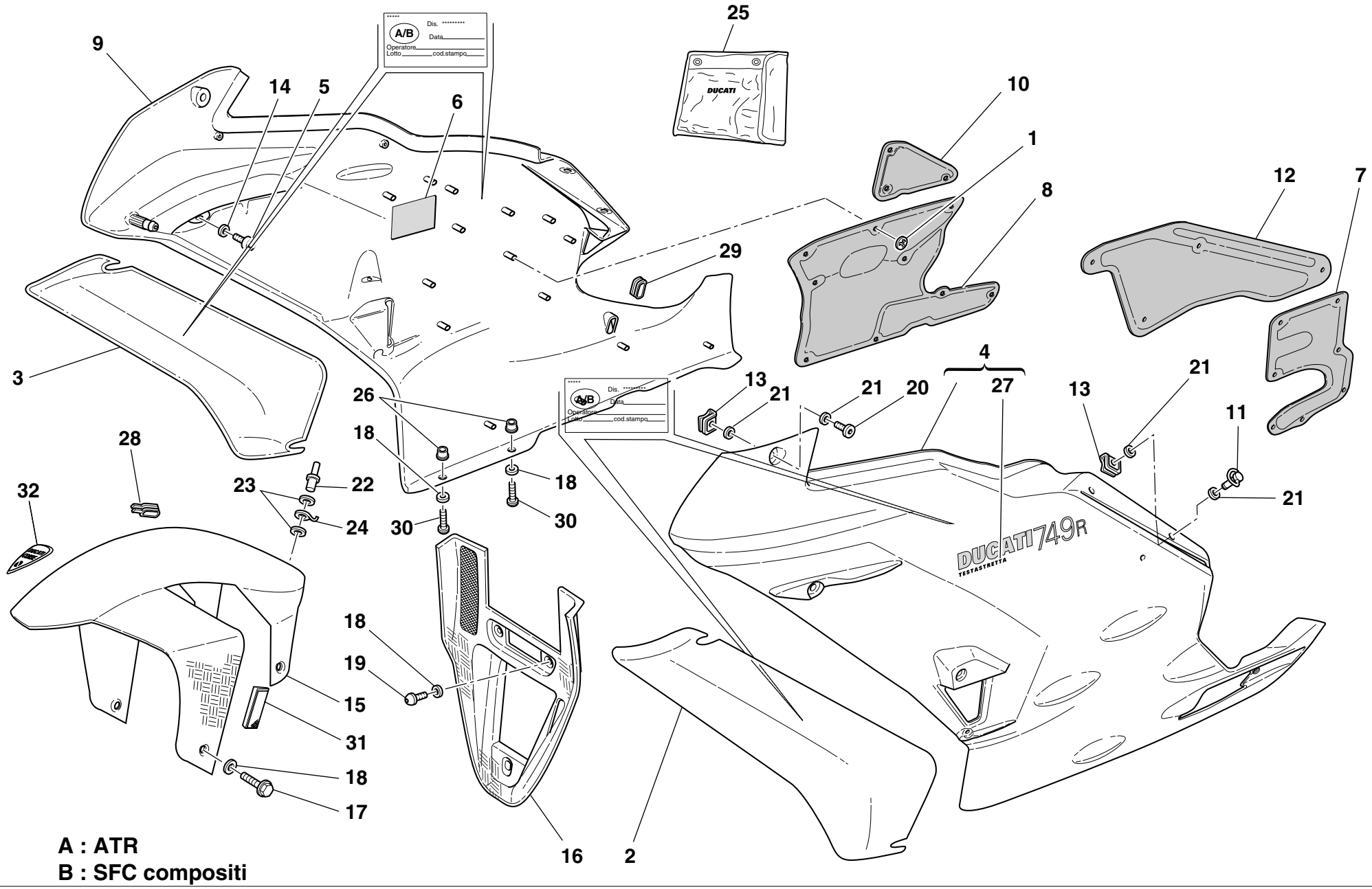

A : ATR
B : SFC compositi

DRAWING **034a** **FAIRING**

NOTES	NO.	CODE NO.	DESCRIPTION	VALIDITY	Q.TY
	1	850.4.044.1A	Quik fastening		26
	2	480.1.178.2AA	L.H. Air deflector (RED)		1
	2	480.3.178.2A	L.H. Air deflector (CARBON)		1
	3	480.1.177.2AA	R.H. air deflector (RED)		1
	3	480.3.177.2A	R.H. air deflector (CARBON)		1
	4	480.1.197.1AA	L.H. fairing (RED)		1
	4	480.1.197.2AA	L.H. fairing (RED)		1
	4	480.3.176.1B	L.H. fairing (CARBON) - (A)		1
	4	480.3.176.2B	L.H. fairing (CARBON) - (B)		1
	5	771.5.040.2B	Screw		6
	6	926.1.003.1A	Velcro		1
	7	486.1.064.1A	L.H. side panel		1
	8	486.1.063.1A	R.H. side panel		1
	9	480.1.198.1AA	R.H. fairing (RED)		1
	9	480.1.198.2AA	R.H. fairing (RED)		1
	9	480.3.175.1B	R.H. fairing (CARBON) - (A)		1
	9	480.3.175.2B	R.H. fairing (CARBON) - (B)		1
	10	486.1.069.1A	R.H. side panel		1
	11	850.4.058.1A	Pin		4
	12	486.1.062.1A	L.H. side panel		1
	13	850.4.049.1A	Quik fastening		9
	14	856.4.002.1A	Washer		6
	15	564.1.048.1A	Front mudguard (CARBON)		1
	16	484.1.048.1B	Air manifold (CARBON)		1
	16	484.1.048.2B	Manifold (CARBON)		1
	17	772.5.037.1AB	Screw		4
	18	856.1.042.1A	Nylon washer		9

NOTES	NO.	CODE NO.	DESCRIPTION	VALIDITY	Q.TY
	19	775.1.020.1A	Screw		3
	20	850.4.050.1A	Pin		5
	21	850.4.051.1A	Seal ring		18
	22	736.4.013.1B	Shear rivet		1
	23	852.1.075.1A	Washer		2
	24	850.1.003.1A	Clip		1
	25	697.2.015.1A	Tool bag		1
	26	0364.99.020	Bush		2
	27	438.1.365.1AC	Sticker"testastretta" (RED)		2
	28	764.1.061.1A	Seal		1
	29	764.1.055.1A	Rubber pad		1
	30	775.1.021.1A	Screw		2
	31	529.1.008.1AB	Cat's eye (AMBER)		2
	32	435.1.106.1A	Sticker		1

CATALOGUE No: *915.1.204.1A*
ISSUED: *02 - 04*

DRAWING **035** **FUEL INFEED**

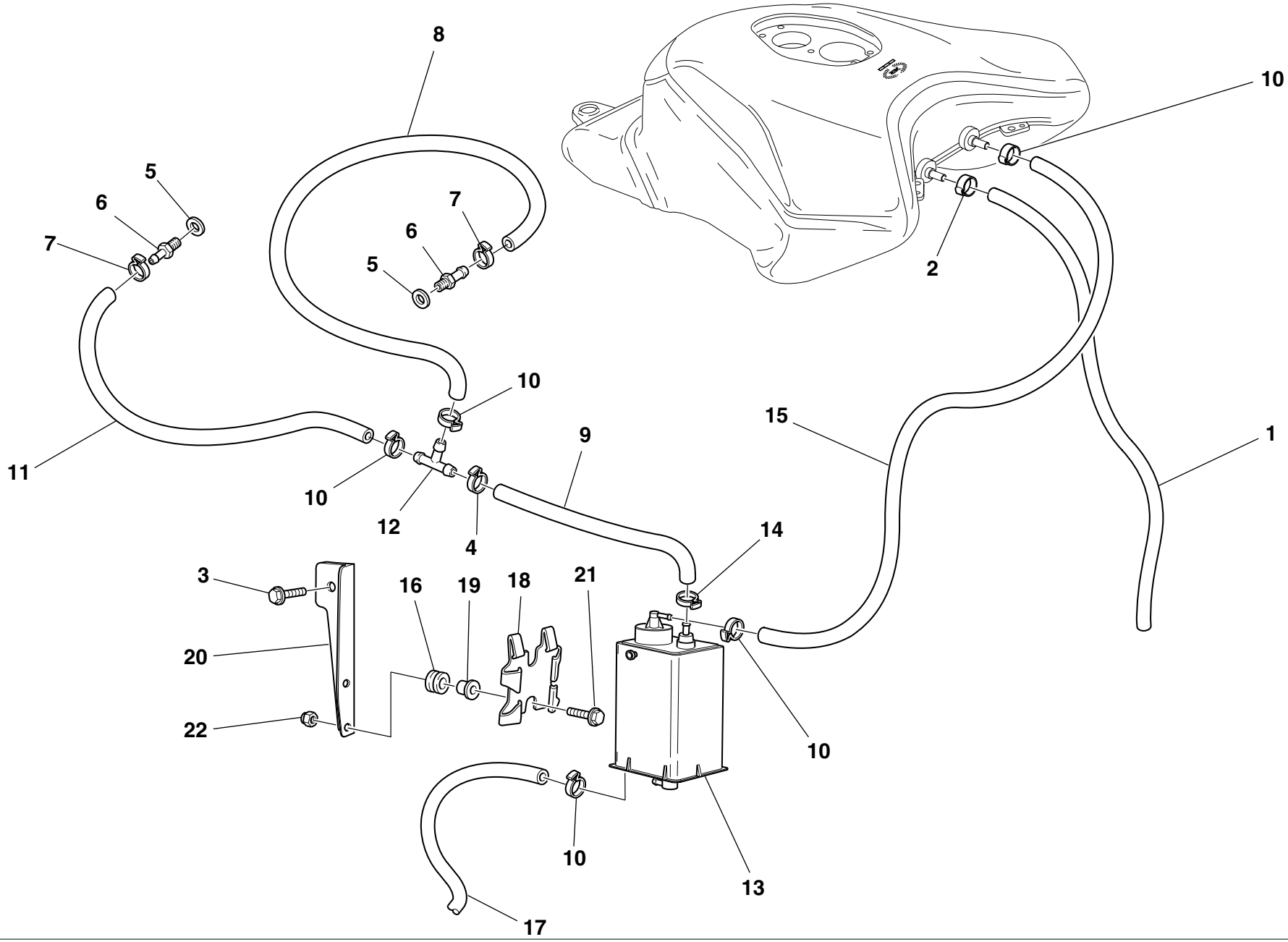

DRAWING **035** **FUEL INFEED**

NOTES	NO.	CODE NO.	DESCRIPTION	VALIDITY	Q.TY
	1	590.1.233.1A	Breather pipe		1
	2	741.4.065.1A	Hose guide		1
	3	772.5.032.1A	Screw		1
	4	741.4.059.1A	Hose guide		1
	5	420.2.000.7A	Gasket		2
	6	814.1.111.2B	Union		2
	7	741.4.013.1B	Hose guide		2
	8	590.1.192.1A	Tube		1
	9	590.1.213.1A	Tube		1
	10	741.4.063.1A	Hose guide		5
	11	590.1.111.1A	Fuel pipe		2
	12	0361.98.850	Shunt valve		1
	13	426.1.007.1B	CANISTER filter		1
	14	741.4.058.1A	Hose guide		1
	15	590.1.106.1A	Tube		1
	16	764.1.029.1A	Rubber pad		2
	17	0770.83135	Tube		1
	18	827.1.157.1A	Plate		1
	19	716.1.043.1A	Spacer		2
	20	830.1.281.1A	Bracket		1
	21	772.5.031.1AB	Screw		2
	22	749.4.004.1A	Nut		2

NOTES	NO.	CODE NO.	DESCRIPTION	VALIDITY	Q.TY

CATALOGUE No: *915.1.204.1A*
ISSUED: *02 - 04*

DRAWING **036** **MARKING PLATES**

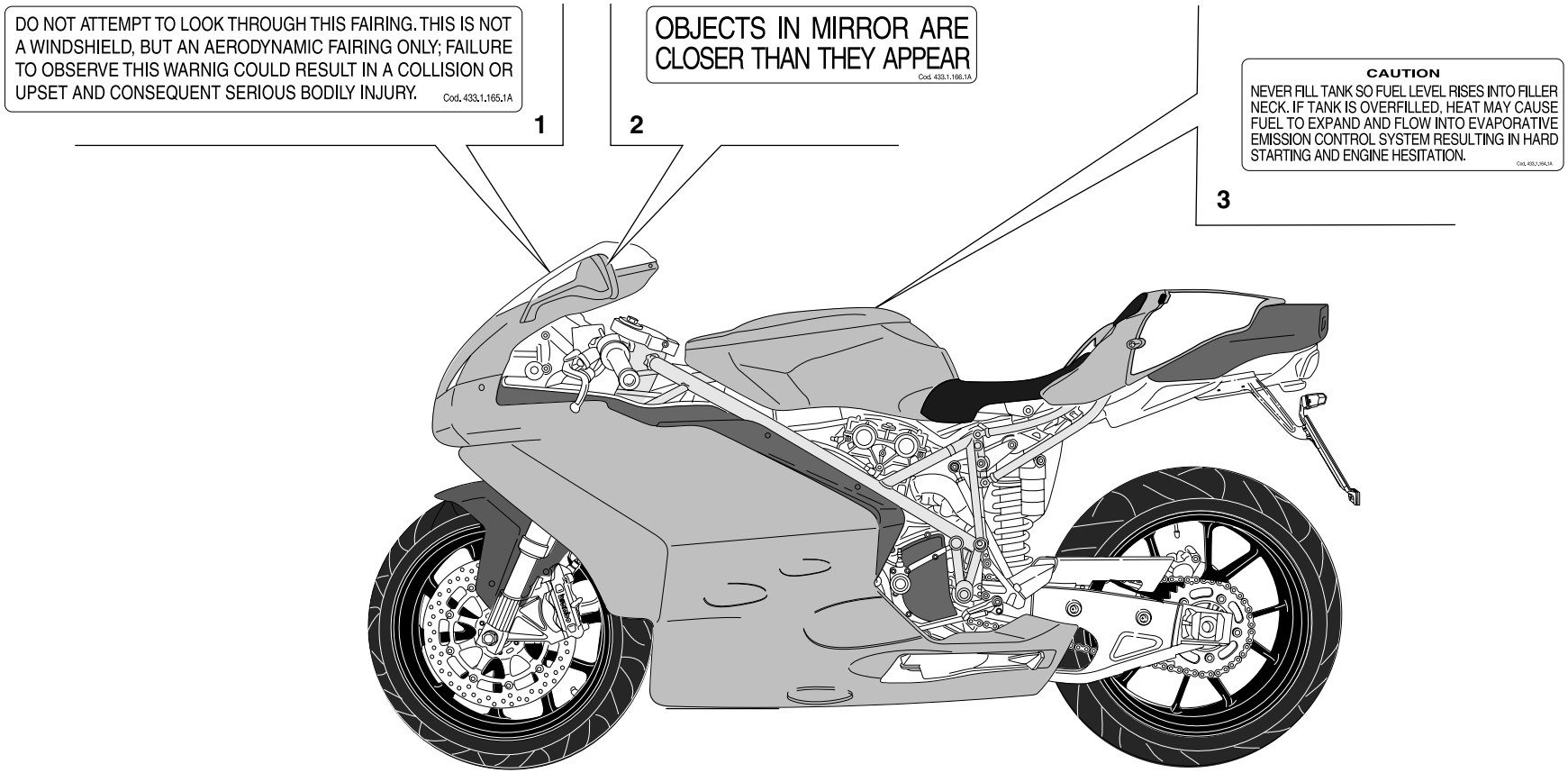

DRAWING **036** **MARKING PLATES**

NOTES	NO.	CODE NO.	DESCRIPTION	VALIDITY	Q.TY
	1	433.1.165.1A	Sticker		1
	2	433.1.166.1A	Label		2
	3	433.1.164.1A	Sticker		1

NOTES	NO.	CODE NO.	DESCRIPTION	VALIDITY	Q.TY

CATALOGUE No: *915.1.204.1A*
ISSUED: *02 - 04*

INDEX

CODE No.	Drwg.	POS. N.	CODE No.	Drwg.	POS. N.	CODE No.	Drwg.	POS. N.	CODE No.	Drwg.	POS. N.	CODE No.	Drwg.	POS. N.
0000.33552	23	2	0647.29.040	12	15	0765.92.205	2	21	150.2.053.2B	3	28	182.2.018.1A	2	18
0000.33552	24	17	0647.92.170	4	27	0770.83135	35	17	156.2.040.1A	6	5	184.1.005.1A	25	20
0000.40427	29	15	0659.16.558	4	1	0797.72.068	18	13	160.1.092.2A	26	20	190.2.012.1A	4	8
0000.59056	22	17	0660.13.060	2	19	0797.72.068	34	16	160.1.094.1A	15	21	194.2.014.1A	4	12
0000.61078	25	26	0660.13.070	2	13	0799.13.110	2	27	160.1.097.1A	12	13	195.4.003.1A	4	22
0000.62652	30	5	0660.13.143	2	9	0803.77.010	26	15	160.2.038.1D	4	7	196.1.014.1C	4	10
0011.52.010	10	23	0660.13.165	2	25	112.1.012.1AA	6	8	160.2.362.2A	32a	1	198.1.029.1A	4	13
0011.52.010	11	20	0660.16.145	4	21	112.1.012.1AB	6	8	170.2.090.1A	4	17	208.1.023.1A	13	3
0124.40.060	8	15	0660.50.020	12	8	117.1.044.1A	25	18	171.2.062.1A	8	13	209.1.013.6A	13	16
0170.91.730	21	11	0660.88.628	4	19	117.2.034.1B	22	27	172.1.002.1B	3	10	209.1.014.6A	13	4
0214.07.350	2	22	0665.49.680	5a	1	117.2.043.2A	4	25	172.1.003.2C	3	8	210.1.050.1A	13	14
0251.47.050	3	1	0670.16.145	3	7	120.2.094.1A	7	10	172.1.004.2C	3	5	211.1.045.1A	13	5
0251.47.054	3	1	0670.16.150	3	3	121.1.078.1B	7	3	172.1.005.2C	3	9	225.2.106.2A	10	1
0272.91.090	2	8	0670.16.155	3	19	121.1.183.1A	7	2	172.1.006.1B	3	18	230213	25	43
0361.98.850	35	12	0670.16.163	3	11	121.2.038.1B	7	4	172.1.007.1B	3	24	240.1.025.1A	9	19
0364.99.020	34a	26	0670.16.164	3	11	122.2.117.1B	7	1	172.1.008.1C	3	22	242.2.068.1A	11a	13
0370.49.250	10	22	0670.16.165	3	15	135.2.009.1A	17	3	172.1.009.2C	3	21	243.1.025.1AD	5	1
0400.09.050	2	21	0670.16.170	3	26	140.2.034.1A	14	10	172.1.010.2C	3	20	243.2.038.3A	5a	6
0400.17.030	10	13	0670.16.171	3	26	146.2.115.1A	6	1	172.1.011.2C	3	23	245.1.065.1A	8	3
0400.17.030	4	9	0670.16.184	3	15	147.1.014.1A	8	10	173.1.013.1A	12	20	245.1.066.1A	8	1
0400.29.125	2	34	0670.16.185	3	15	148.2.186.1A	15	15	174.1.025.1A	9	12	245.1.067.1A	8	2
0400.29.126	2	34	0670.49.310	9	26	148.2.187.1A	15	14	174.2.025.5A	9	1	246.1.073.1A	17	2
0400.49.240	11a	14	0670.49.910	9	21	148.2.188.1A	15	20	176.1.001.1A	12	6	246.1.076.1A	21a	12
0400.49.240	5	13	0691.91.030	27a	26	148.2.189.1A	15	18	176.1.009.1A	12	10	247.1.002.1BC	11	6
041.1.055.1A	1	18	0755.29.025	6	10	149.1.032.3A	3	25	180.1.001.1A	2	11	247.1.083.1A	11	1
041.1.191.1A	1	19	0755.29.025	8	12	150.2.006.1B	3	2	180.1.002.1A	2	12	247.1.120.1A	7	8
0412.02.295	28a	5	0759.49.280	9	15	150.2.047.1B	3	27	180.1.008.1A	2	24	247.1.155.1A	7	9

CATALOGUE No: *915.1.204.1A*
ISSUED: *02 - 04*

INDEX

CODE No.	Drwg.	POS. N.	CODE No.	Drwg.	POS. N.	CODE No.	Drwg.	POS. N.	CODE No.	Drwg.	POS. N.	CODE No.	Drwg.	POS. N.
247.1.161.1A	14a	2	303.1.045.1AA	13	7	373.1.046.1A	28a	22	420.2.001.0A	32	16	455.1.010.1A	25	11
247.1.163.1A	14a	1	303.1.045.1AB	13	7	380.1.014.1A	18a	3	420.2.001.0A	5	16	455.2.003.1A	2	4
247.1.174.1A	9	2	303.1.045.1AC	13	7	389.4.006.1A	18a	8	420.2.006.4A	16	4	456.1.006.2A	22	20
247.1.188.1A	19	22	304.1.048.1A	13	13	389.4.006.1A	20a	10	425.4.010.1A	32a	7	456.2.033.1A	22	19
247.1.191.1A	22	8	304.1.048.1AB	13	13	389.4.007.1A	20a	10	426.1.007.1B	35	13	457.2.013.1A	25	6
247.1.192.1A	22	11	304.1.048.1AC	13	13	389.4.008.1A	20a	10	426.2.016.1A	29	5	460.1.112.1A	19	15
247.1.197.1A	32	12	304.1.049.1A	13	10	389.4.013.1A	18a	8	426.2.017.1A	29	16	460.1.119.1A	27a	13
247.1.205.1A	18	3	304.1.049.1AB	13	10	389.4.013.1A	20a	10	433.1.164.1A	36	3	460.1.120.2A	20	7
247.1.211.1A	14	2	304.1.049.1AC	13	10	389.4.014.1A	18a	5	433.1.165.1A	36	1	460.1.123.1A	33	19
247.1.212.1A	14	1	340.2.241.1A	21b	2	390.4.003.1A	27a	29	433.1.166.1A	36	2	460.1.124.1A	33	12
247.1.261.1B	15	6	340.2.242.1A	21b	1	395.4.013.1A	18	4	433.1.315.1A	28a	27	460.1.125.1A	18	18
247.2.166.2A	11	15	341.1.036.1A	21	29	397.4.002.1A	18	20	435.1.106.1A	34a	32	460.1.148.1A	34	18
250.1.038.1A	9	5	341.1.046.1A	21	21	406.1.015.1F	20	22	437.1.132.1AA	33	26	460.1.149.1A	34	19
251.2.008.1A	11a	17	342.2.038.1A	21a	1	417.6.011.3A	5a	7	438.1.240.1AB	33	20	460.1.159.1A	19	30
254.4.001.1A	5	4	343.1.018.1A	21a	10	417.9.020.5A	24	21	438.1.357.1AB	32	11	460.1.160.1A	19	11
255.1.010.2B	8	18	343.2.005.1A	21a	4	417.9.050.6A	18	2	438.1.365.1AC	34a	27	462.4.037.6A	18	7
255.1.019.2A	15	22	349.1.096.1A	21b	3	418.4.052.7A	15	11	442.1.073.1A	17	6	462.9.012.8A	20	10
264.4.017.1A	11a	1	349.2.010.1A	21b	4	420.2.000.7A	11	17	444.4.003.4A	9	20	463.2.050.5A	14	5
270.4.005.1A	12	1	360.1.043.1A	21	19	420.2.000.7A	14	8	446.1.011.1A	28a	28	463.2.050.5A	14a	4
276.1.041.1A	12	16	360.1.044.1A	21	16	420.2.000.7A	35	5	447.1.055.1A	28a	17	463.2.053.7A	4	15
282.4.044.1A	17	5	361.1.002.1A	21	15	420.2.001.0A	11	19	447.1.056.1A	28a	15	464.1.005.1A	22	12
286.4.112.1C	18	15	364.1.003.1A	21	26	420.2.001.0A	16	8	449.1.045.1A	3	12	464.1.006.1A	22	5
287.4.024.1B	32a	13	365.2.051.1C	28	10	420.2.001.0A	19	12	451.1.017.1A	8	23	470.2.178.1AW	22	1
301.2.171.1A	15	1	369.1.010.1A	28a	1	420.2.001.0A	2	5	451.1.018.2A	8	6	471.1.009.1BW	27	1
303.1.044.1AA	13	12	370.1.044.1A	28a	13	420.2.001.0A	23	8	451.1.042.1A	8	29	480.1.177.2AA	34a	3
303.1.044.1AB	13	12	372.2.017.1A	28	8	420.2.001.0A	24	4	451.1.043.1A	8	7	480.1.178.2AA	34a	2
303.1.044.1AC	13	12	373.1.045.1A	28a	20	420.2.001.0A	25	23	451.1.044.1A	8	24	480.1.197.1AA	34a	4

CATALOGUE No: *915.1.204.1A*
ISSUED: *02 - 04*

INDEX

CODE No.	Drwg.	POS. N.	CODE No.	Drwg.	POS. N.	CODE No.	Drwg.	POS. N.	CODE No.	Drwg.	POS. N.	CODE No.	Drwg.	POS. N.
480.1.197.2AA	34a	4	492.4.047.1A	26	13	525.1.014.1A	27a	24	552.4.012.1A	20	20	586.1.058.1AA	32	1
480.1.198.1AA	34a	9	492.4.055.1A	26	5	525.1.019.1A	27a	16	552.4.013.1A	31	12	587.1.049.1A	32	2
480.1.198.2AA	34a	9	494.1.102.1A	26	24	529.1.008.1AB	34a	31	552.4.020.1A	11	8	590.1.106.1A	35	15
480.3.175.1B	34a	9	497.2.001.2A	26	11	529.1.010.1A	27a	8	552.4.028.1A	1c	15	590.1.111.1A	35	11
480.3.175.2B	34a	9	501.2.102.1AB	26	8	531.1.001.1A	27a	23	552.4.037.1A	25	34	590.1.189.1A	1d	1
480.3.176.1B	34a	4	502.2.102.1AB	26	16	531.1.002.1A	27a	22	552.4.048.1A	32a	10	590.1.190.1A	1d	2
480.3.176.2B	34a	4	510.1.241.1A	17	9	536.2.002.2A	20	16	553.4.005.1A	31	10	590.1.192.1A	35	8
480.3.177.2A	34a	3	510.1.242.1A	27a	21	539.1.021.1A	2	6	556.1.031.1A	22a	5	590.1.195.1A	32a	3
480.3.178.2A	34a	2	510.1.243.3A	20a	1	539.1.023.2A	22a	3	556.2.032.1A	22a	10	590.1.198.1A	32a	4
481.1.030.1AA	34	1	510.1.296.1A	27a	28	539.4.003.1B	25	5	561.1.024.1A	27a	7	590.1.199.1A	32a	12
481.1.030.2AA	34	1	510.1.323.2A	18a	1	539.4.030.1A	5	9	564.1.048.1A	34a	15	590.1.213.1A	35	9
481.3.030.1A	34	1	514.1.032.1A	1d	9	539.4.035.1A	24	6	570.1.072.1B	19	4	590.1.233.1A	35	1
481.3.030.2A	34	1	514.1.033.1A	1d	13	539.4.036.1A	23	13	570.1.074.1B	19	21	593.1.003.1B	10	11
483.1.035.1AA	33	9	514.1.034.1A	1d	12	540.4.019.1A	18	8	570.1.099.1A	19a	2	593.1.018.1A	9	29
483.1.047.1AA	33	14	514.1.035.1A	1d	10	541.4.007.1A	18a	6	571.1.072.1B	19	9	595.1.052.1A	33	1
483.3.035.1A	33	9	514.1.036.1A	1d	10	541.4.007.1A	20a	9	571.1.075.1B	19	20	595.1.055.1A	33	18
483.3.037.1A	33	14	514.1.037.1A	1d	6	548.4.040.1A	30	1	573.1.064.3B	19	8	598.2.031.1D	27	4
484.1.041.1A	29	6	514.1.038.1A	1d	14	548.4.041.1A	30	7	573.1.081.1A	19a	1	598.4.016.1A	21	12
484.1.042.1A	29	10	514.1.040.1A	18	17	548.4.042.1A	16	12	576.1.046.1A	19	37	598.4.018.1A	21	13
484.1.048.1B	34a	16	516.4.003.1B	20a	3	548.4.043.1A	16	1	576.1.046.1A	19a	3	60N102511	11a	23
484.1.048.2B	34a	16	518.4.004.1C	21a	13	549.1.030.1A	16	7	576.1.047.1A	19	38	60N107330	18	22
486.1.062.1A	34a	12	520.4.022.1C	20	8	550.4.012.1A	30	10	576.1.047.1A	19a	4	60N107330	24	22
486.1.063.1A	34a	8	520.4.023.1B	20	15	550.4.013.1A	30	12	576.1.048.1A	19	39	60N107335	4	26
486.1.064.1A	34a	7	523.2.009.1AA	34	8	552.1.037.1A	1d	4	576.1.048.1A	19a	5	610.4.053.1A	24	14
486.1.068.1A	32	10	523.2.010.1AA	34	9	552.1.038.1A	1d	5	585.1.034.1A	29	7	610.4.054.1A	24	11
486.1.069.1A	34a	10	525.1.012.1A	27a	2	552.1.039.1A	1d	7	585.4.004.1A	24	12	611.4.020.1A	25	37
487.2.028.2A	34	13	525.1.013.1A	27a	1	552.1.040.1A	1d	11	585.4.005.1A	23	3	612.4.005.1A	23	4

CATALOGUE No: *915.1.204.1A*
ISSUED: *02 - 04*

INDEX

CODE No.	Drwg.	POS. N.	CODE No.	Drwg.	POS. N.	CODE No.	Drwg.	POS. N.	CODE No.	Drwg.	POS. N.	CODE No.	Drwg.	POS. N.
612.4.005.1A	24	25	654.2.016.1A	21	1	702.4.018.1A	12	19	711.1.092.2A	15	4	713.1.239.1A	28	2
612.4.008.1A	25	40	656.2.001.1A	21	18	702.4.020.1A	10a	11	711.1.093.2A	7	12	714.1.047.1A	26	7
612.4.016.1A	25	36	668.1.001.3A	11	14	702.4.033.1A	10	21	711.1.095.1A	10a	7	714.1.057.1A	26	14
612.4.022.1A	24	19	670.4.030.1A	18a	4	702.4.033.1A	10a	2	711.1.113.1A	22a	4	715.1.003.1A	28	5
612.4.023.1A	23	14	672.1.030.1A	17	11	702.4.038.1A	26	30	712.1.029.1A	28a	9	716.1.003.1A	16	3
612.4.023.1A	24	1	676.2.053.1A	26	28	702.4.058.1A	8	25	712.1.030.1A	28a	12	716.1.043.1A	35	19
613.4.030.1A	24	18	676.4.037.1A	26	27	702.5.008.1A	10	6	713.1.011.1A	3	15	716.1.072.2A	8	20
613.4.038.1A	25	38	677.4.003.1A	1b	3	702.5.008.1A	11a	4	713.1.014.1A	3	11	716.1.073.2A	8	17
616.1.007.2A	31	6	680.1.001.1B	9	7	702.5.016.1A	4	14	713.1.014.1B	3	11	716.1.107.1B	19	26
616.1.009.2A	31	2	680.5.003.1A	15	19	702.5.019.1A	10a	1	713.1.014.1E	3	11	716.1.108.1A	27a	19
618.4.052.1A	24	13	684.1.054.1A	8	27	703.1.035.1A	21a	15	713.1.014.1F	3	11	716.1.111.1A	20a	11
618.4.053.1A	24	23	684.1.056.1A	20	18	703.5.002.2A	15	24	713.1.070.1A	4	29	72094.1616	10	17
619.4.024.1A	25	28	684.1.057.1A	20	19	70610.8120	4	11	713.1.082.1A	19	6	72121.2106	6	4
624.4.027.1A	24	3	685.5.002.1A	25	14	70700.6N02	25	41	713.1.095.1A	4	23	723.1.006.2A	32	14
625.4.009.1A	25	16	697.2.015.1A	34a	25	710.1.001.1A	9	13	713.1.128.1B	11a	12	72944.1542	8	21
626.4.031.1A	23	11	698.1.033.1A	1d	15	710.1.025.1A	28	11	713.1.140.1A	10a	4	729906FN1	18	6
626.4.031.1A	24	8	700.1.005.1A	26	17	710.1.032.1A	10	26	713.1.157.1A	3	13	729906FN1	19	18
626.4.032.1A	23	9	700.1.036.1A	12	24	710.1.032.1A	10a	20	713.1.184.1A	26	22	734306N01	11a	21
626.4.032.1A	24	7	700.1.041.1A	33	3	710.1.061.1A	6	7	713.1.186.1A	26	23	7350.33.804	8	26
630.4.016.1A	23	5	701.4.004.1A	28	7	710.1.084.1A	26	19	713.1.187.1A	28a	11	73500.1237	12	7
631.4.016.1A	25	25	701.4.005.1A	3	4	710.1.090.1A	28a	4	713.1.192.1A	25	33	73500.1237	9	25
631.4.017.1A	23	12	701.4.008.1A	12	21	710.1.105.1A	21a	6	713.1.196.1A	26	4	73500.1440	12	11
631.4.019.1A	24	2	702.4.004.1A	21a	3	710.1.111.1A	10a	12	713.1.197.1A	26	9	73500.1542	2	15
632.1.021.1A	23	6	702.4.009.1A	11a	11	710.1.112.1A	10	4	713.1.205.1A	25	31	73500.2054	8	9
650.4.008.1B	21	17	702.4.010.2A	11a	9	711.1.072.1A	10	27	713.1.209.1A	21	20	73503.3380	10	9
651.4.013.1A	21	30	702.4.013.1A	10	19	711.1.072.1A	10a	21	713.1.210.1A	21	28	73503.3380	10a	10
652.4.006.1A	21a	14	702.4.017.1A	4	20	711.1.091.2A	15	10	713.1.235.1A	24	16	73503.3380	11a	5

CATALOGUE No: *915.1.204.1A*
ISSUED: *02 - 04*

INDEX

CODE No.	Drwg.	POS. N.	CODE No.	Drwg.	POS. N.	CODE No.	Drwg.	POS. N.	CODE No.	Drwg.	POS. N.	CODE No.	Drwg.	POS. N.
736.4.012.1A	33	27	741.4.099.1A	25	29	749.4.009.1A	19a	6	764.1.011.1A	25	12	76401.0009	28	16
736.4.012.1A	34	7	741.4.101.1A	31	16	750.1.007.1A	3	32	764.1.022.1A	16	2	76401.0010	28	13
736.4.013.1B	34a	22	741.5.011.1C	31	19	750.1.012.2A	6	14	764.1.022.1A	20	21	76402.0002	3	17
737.4.012.4A	8	22	741.5.033.1B	29	2	750.1.021.1A	28	12	764.1.022.1A	30	4	766.1.020.1A	15	2
741.1.010.1A	18a	10	74172.1008	8	16	750.1.022.1A	28	15	764.1.024.1A	19	5	766.1.045.1A	10	16
741.1.012.1A	18a	11	746.4.006.1A	19	34	750.1.028.1A	34	10	764.1.028.1A	17	12	766.4.019.1A	13	20
741.1.012.1A	24	10	746.4.006.1A	19a	7	750.1.047.1A	15	7	764.1.029.1A	35	16	76835.1134	2	10
741.1.013.1A	18a	12	746.4.007.1A	19	41	750.1.050.1A	4	6	764.1.041.1A	31	14	770.5.250.8B	10a	5
741.1.029.1A	29	11	747.5.003.1A	21	9	750.1.057.1A	6	13	764.1.042.1A	19	14	770.5.250.8B	11a	6
741.1.030.1B	24	20	747.5.003.1A	22	23	750.1.061.1A	28a	21	764.1.045.1A	31	15	771.1.016.1A	28	18
741.4.002.1A	31	8	747.5.003.1A	25	42	750.1.062.1A	22	2	764.1.047.1A	20	29	771.1.021.1A	26	3
741.4.002.1A	7	15	747.5.005.1B	25	7	750.1.112.1A	28	17	764.1.047.1A	34	3	771.1.026.1A	5	2
741.4.013.1B	35	7	748.1.014.1A	26	10	750.1.115.1A	32a	6	764.1.050.1A	22	26	771.1.027.1A	5	8
741.4.025.1A	30	8	748.1.024.1A	19	1	750.1.121.1A	12	3	764.1.051.1A	22	25	771.1.031.1A	28	1
741.4.025.1A	31	3	748.1.036.1A	27a	10	750.1.125.1A	28a	19	764.1.055.1A	34a	29	771.4.011.1AB	27	2
741.4.038.1A	17	7	748.1.038.1A	10	14	750.4.010.1A	20	5	764.1.056.1A	29	17	771.4.014.1A	23	10
741.4.038.1A	18a	2	748.1.040.1A	2	23	750.5.001.1A	32	3	764.1.059.1A	20	28	771.4.014.1A	24	9
741.4.038.1A	25	44	748.1.044.1A	8	8	75113.2566	4	18	764.1.059.1A	34	2	771.5.040.2B	34a	5
741.4.038.1A	30	2	748.4.024.1AB	26	25	75162.2566	26	6	764.1.060.1A	34	14	771.5.041.8B	16	13
741.4.043.1A	25	17	748.4.035.1A	27	3	75162.2566	28a	10	764.1.061.1A	34a	28	771.5.043.8B	4	4
741.4.058.1A	35	14	748.4.037.1AB	28	3	75162.3075	26	21	764.1.062.1A	18	1	771.5.064.8B	11	2
741.4.059.1A	35	4	749.4.002.1A	21a	11	75191.3380	10	5	764.1.063.1A	19	28	771.5.064.8B	11a	16
741.4.063.1A	35	10	749.4.004.1A	20a	5	756.1.007.1A	28a	2	764.1.064.1A	27a	3	771.5.064.8B	31	7
741.4.065.1A	35	2	749.4.004.1A	22	21	75794.1542	10a	9	764.1.067.1A	33	16	771.5.065.2BB	11	21
741.4.067.1A	14	9	749.4.004.1A	32	4	76267.0012	9	24	764.4.054.1A	13	8	771.5.065.8B	14	3
741.4.092.1A	32a	5	749.4.004.1A	35	22	76270.0827	3	29	76400.0001	28a	6	771.5.065.8B	14a	3
741.4.093.1A	32a	8	749.4.009.1A	19	40	764.1.011.1A	22	18	76401.0002	22	22	771.5.065.8B	15	13

CATALOGUE No: *915.1.204.1A*
ISSUED: *02 - 04*

INDEX

CODE No.	Drwg.	POS. N.	CODE No.	Drwg.	POS. N.	CODE No.	Drwg.	POS. N.	CODE No.	Drwg.	POS. N.	CODE No.	Drwg.	POS. N.
771.5.065.8B	7	5	771.5.136.8B	10a	17	772.5.029.1AB	20	4	775.1.017.1A	32	5	779.1.162.2A	9	27
771.5.066.8B	11	16	771.5.154.8B	22a	9	772.5.029.1AB	25	19	775.1.017.1A	33	13	779.1.187.1A	8	5
771.5.066.8B	12	5	771.5.637.8B	22	6	772.5.029.1AB	32	13	775.1.018.1A	27a	12	779.1.189.1A	15	12
771.5.066.8B	15	28	771.5.639.8B	25	30	772.5.031.1AB	20	2	775.1.019.1A	18a	13	779.1.190.1A	15	3
771.5.067.2BB	33	7	771.5.665.8B	22	16	772.5.031.1AB	35	21	775.1.020.1A	28a	29	779.1.198.2A	11	3
771.5.067.8B	11	13	771.5.665.8B	25	35	772.5.032.1A	20a	6	775.1.020.1A	34a	19	779.1.203.2A	2	7
771.5.067.8B	2	28	771.5.666.8B	18	9	772.5.032.1A	27a	11	775.1.021.1A	34a	30	779.1.213.1A	22	24
771.5.067.8B	9	16	771.5.666.8B	21	24	772.5.032.1A	35	3	775.1.022.1A	18	21	779.1.237.1B	25	8
771.5.069.8B	11	11	771.5.666.8B	22	29	772.5.033.1AB	30	3	775.1.027.1A	20a	4	779.1.252.1A	21a	16
771.5.069.8B	12	22	771.5.667.8B	22	14	772.5.034.1A	18	16	775.1.029.1A	27a	15	779.1.260.1A	19	13
771.5.069.8B	15	5	771.5.669.8B	10	28	772.5.035.1A	20	23	775.1.031.1B	19	10	779.1.261.1A	31	1
771.5.069.8B	5	5	771.5.669.8B	10a	22	772.5.037.1AB	20a	8	775.1.033.1A	19	32	779.1.274.1A	17	10
771.5.069.8B	9	10	771.5.673.8B	21	25	772.5.037.1AB	34a	17	775.1.033.1A	32	8	779.1.279.1C	27a	5
771.5.070.2BB	19	17	771.5.723.8B	21	6	772.5.038.1AB	19	7	775.1.034.1AB	18	12	779.1.282.1A	33	5
771.5.071.8B	11	12	771.5.723.8B	22	7	772.5.038.1AB	20	12	775.1.035.1B	19	24	779.1.283.1A	34	4
771.5.071.8B	12	23	771.5.723.8B	25	39	773.5.039.8B	21a	7	775.1.062.2A	10	29	779.1.286.2A	33	22
771.5.071.8B	14a	8	771.5.725.8B	21	31	773.5.061.8B	14	7	777.5.049.8B	11	7	779.1.293.1A	25	15
771.5.072.8B	10a	14	771.5.725.8B	21a	9	773.5.069.8B	8	4	778.5.009.1A	21	3	779.1.301.1AB	30	6
771.5.072.8B	31	5	771.5.727.8B	21	22	773.5.069.8B	9	3	779.1.026.1A	10	3	779.1.311.1A	26	12
771.5.073.2B	11a	2	771.5.752.8B	10a	13	774.5.002.1B	17	1	779.1.026.1A	11	26	779.1.318.1A	16	9
771.5.078.8B	12	12	771.5.754.8B	25	2	774.5.006.1A	32a	11	779.1.029.2A	10a	16	779.1.331.1A	24	15
771.5.078.8B	5	3	771.5.937.8B	28	4	775.1.007.1AB	34	12	779.1.039.1A	2	3	779.1.334.1A	19	31
771.5.079.8B	5	17	771.5.938.8B	28	9	775.1.008.3A	20	6	779.1.060.1A	21	8	779.1.365.1A	21a	5
771.5.080.8B	10a	15	772.1.028.1A	28a	3	775.1.008.3A	28a	16	779.1.082.1AB	23	1	779.1.366.1AB	23	7
771.5.123.8B	2	30	772.1.041.1A	34	5	775.1.008.3A	29	4	779.1.082.1AB	24	24	779.1.366.1AB	24	5
771.5.129.8B	9	8	772.1.042.1A	29	14	775.1.008.3A	33	8	779.1.109.1A	6	2	779.1.366.1AB	25	22
771.5.136.2B	10	10	772.1.043.1A	29	13	775.1.017.1A	27a	20	779.1.114.1A	6	9	779.1.371.1A	21b	5

CATALOGUE No: *915.1.204.1A*
ISSUED: *02 - 04*

INDEX

CODE No.	Drwg.	POS. N.	CODE No.	Drwg.	POS. N.	CODE No.	Drwg.	POS. N.	CODE No.	Drwg.	POS. N.	CODE No.	Drwg.	POS. N.
779.1.372.1A	28a	26	791.1.012.1A	32	15	8000.50450	29	8	821.1.135.2A	26	18	829.1.401.1A	20	24
779.1.373.1A	28a	18	791.1.058.1A	17	13	8000.50454	29	3	821.1.159.1A	16	15	829.1.419.1A	18	10
779.4.005.2A	22a	1	791.1.060.1A	18	5	8000.53724	18a	7	821.1.162.1A	25	13	829.1.439.1A	10	30
779.4.075.1A	11a	3	791.2.037.1A	7	6	8000.56359	19	19	821.1.170.1A	22	13	829.2.479.1A	20	1
779.4.076.1A	30	11	799.1.025.1A	2	20	8000.59056	25	10	821.1.171.1A	18	14	829.2.480.1A	20	14
779.5.030.2A	15	25	799.1.048.2A	19	3	8000.61070	16	14	821.1.179.1A	13	17	830.1.235.1A	11a	15
780.1.005.1A	10a	6	799.1.049.1A	2	1	8000.62652	19	16	821.1.180.1A	13	15	830.1.261.1A	10	24
780.1.007.1A	19	25	799.1.051.2A	4	28	8000.66336	34	6	821.1.181.1A	13	2	830.1.262.1A	10a	18
780.1.018.1A	9	31	799.1.051.2A	6	3	8000.70119	26	29	821.1.182.1A	13	1	830.1.263.2A	27a	6
780.5.001.1A	11	18	799.1.055.1A	9	30	8000.70139	1b	8	821.1.184.1A	20	27	830.1.281.1A	35	20
780.5.001.1A	16	11	799.1.066.1B	4	5	806.1.015.1A	33	23	821.1.209.1A	11	25	832.1.026.1A	28a	14
780.5.001.1A	5	15	799.1.083.1B	25	4	806.1.016.1A	33	21	824.1.083.1A	22	9	832.1.027.1B	33	11
781.1.009.1A	16	17	799.1.158.1A	22a	8	808.2.047.1A	21	4	824.1.084.1A	22	28	835.1.005.1B	20	11
786.1.056.1A	7	13	799.1.162.1A	13	18	814.1.081.1A	7	14	825.1.028.2A	25	32	840.1.185.1A	13	11
786.1.075.1A	7	11	799.1.163.1A	13	19	814.1.111.2B	35	6	826.1.009.1A	2	33	840.1.185.1AA	13	11
788.1.052.1A	5	14	799.1.166.1A	22	3	814.1.114.1A	1d	8	826.1.012.1A	10	18	840.1.185.1AB	13	11
788.1.054.1A	12	4	799.1.171.1A	21	2	814.1.117.1A	14a	7	826.1.015.1A	20	26	840.1.185.1AC	13	11
788.1.062.1A	15	9	799.2.077.2A	9	14	814.4.010.1A	32a	2	826.1.019.1A	11	24	840.1.185.1AD	13	11
788.1.064.1A	14	6	799.2.159.1A	22a	7	815.1.022.1A	16	5	827.1.157.1A	35	18	840.1.185.1AE	13	11
788.1.064.1A	14a	5	800.1.083.1A	31	9	818.2.011.1A	4	3	827.1.273.1A	21a	8	840.1.185.1AF	13	11
788.1.065.1A	9	17	800.1.112.1A	31	4	819.1.040.1A	28a	23	829.1.078.1A	25	1	840.1.185.1AG	13	11
788.1.076.1A	11	9	800.1.113.1A	31	17	819.1.043.1A	26	1	829.1.190.1A	18a	9	840.1.185.1AH	13	11
788.1.076.1AA	11	9	800.1.122.1A	7	17	821.1.001.1A	2	26	829.1.190.1A	20a	2	840.1.185.1AI	13	11
788.1.076.1AB	11	9	800.1.123.1A	7	16	821.1.051.1AB	22	4	829.1.366.1A	22a	6	840.1.185.1AJ	13	11
790.1.004.1A	19	2	800.2.121.1A	30	9	821.1.052.1AB	25	9	829.1.369.1A	20	3	840.1.185.1AK	13	11
790.1.009.1A	19	36	8000.36230	27a	27	821.1.070.1A	2	17	829.1.370.1A	20	9	840.1.185.1AL	13	11
790.1.010.1A	19	35	8000.36726	27a	30	821.1.134.1A	22a	2	829.1.386.1A	20a	7	840.1.185.1AM	13	11

CATALOGUE No: *915.1.204.1A*
ISSUED: *02 - 04*

INDEX

CODE No.	Drwg.	POS. N.	CODE No.	Drwg.	POS. N.	CODE No.	Drwg.	POS. N.	CODE No.	Drwg.	POS. N.	CODE No.	Drwg.	POS. N.
840.1.185.1AN	13	11	840.1.186.1AS	13	9	852.1.072.1A	19	23	852.1.158.1A	25	24	856.1.031.1A	3	16
840.1.185.1AO	13	11	840.1.186.1AT	13	9	852.1.075.1A	33	28	852.1.160.1A	18	11	856.1.042.1A	34a	18
840.1.185.1AP	13	11	840.1.186.1AU	13	9	852.1.075.1A	34a	23	852.1.160.1A	18a	14	856.1.061.2A	15	8
840.1.185.1AQ	13	11	841.1.002.2A	4	2	852.1.094.1A	2	19	852.1.161.1A	18	23	856.1.062.2A	8	19
840.1.185.1AR	13	11	845.4.005.1B	13	6	852.1.104.1A	6	11	852.1.162.1A	27a	17	856.1.064.2A	10	15
840.1.185.1AS	13	11	848.2.002.1A	21	23	852.1.104.1B	6	11	852.1.163.1A	19	27	856.1.071.1A	12	9
840.1.185.1AT	13	11	850.1.003.1A	34a	24	852.1.104.1C	6	11	852.1.166.1A	33	25	856.1.074.2A	15	23
840.1.185.1AU	13	11	850.1.014.1A	33	17	852.1.104.1D	6	11	852.1.172.1A	11a	7	856.1.075.1A	12	17
840.1.186.1A	13	9	850.4.041.1A	18	19	852.1.104.1E	6	11	852.1.172.1A	2	29	856.1.087.1A	33	4
840.1.186.1AA	13	9	850.4.044.1A	34a	1	852.1.104.1F	6	11	852.1.174.1A	2	31	856.1.091.1A	19	33
840.1.186.1AB	13	9	850.4.047.1A	27a	14	852.1.104.1G	6	11	852.1.176.1A	14a	10	856.4.002.1A	33	2
840.1.186.1AC	13	9	850.4.049.1A	34	17	852.1.104.1H	6	11	852.1.176.1A	15	29	856.4.002.1A	34a	14
840.1.186.1AD	13	9	850.4.049.1A	34a	13	852.1.104.1I	6	11	852.1.195.1A	5	10	861.5.013.1A	21	10
840.1.186.1AE	13	9	850.4.050.1A	34a	20	852.1.104.1J	6	11	852.1.195.1A	9	28	863.1.002.1A	12	14
840.1.186.1AF	13	9	850.4.051.1A	34a	21	852.1.104.1K	6	11	852.4.008.1A	10	25	866.1.036.1A	20	25
840.1.186.1AG	13	9	850.4.052.1A	27a	9	852.1.104.1L	6	11	852.4.008.1A	10a	19	866.1.044.1A	16	16
840.1.186.1AH	13	9	850.4.058.1A	34a	11	852.1.104.1M	6	11	852.4.170.1A	33	24	872.1.015.1A	21	14
840.1.186.1AI	13	9	850.4.064.1A	19	29	852.1.104.1N	6	11	852.5.009.1A	33	10	872.1.016.1A	28a	7
840.1.186.1AJ	13	9	851.1.004.1A	3	31	852.1.105.1AB	3	26	852.5.026.1A	10	2	872.1.036.1A	20	13
840.1.186.1AK	13	9	851.1.010.1A	6	12	852.1.105.1AG	3	26	853.1.002.1A	8	28	872.1.037.1A	20	17
840.1.186.1AL	13	9	851.1.013.1A	8	14	852.1.114.1A	11a	10	853.1.002.1A	9	9	872.1.042.1A	28a	8
840.1.186.1AM	13	9	852.1.005.1A	2	14	852.1.120.1A	11	22	853.1.003.1A	11	23	872.4.043.1A	17	4
840.1.186.1AN	13	9	852.1.024.1A	34	11	852.1.135.1A	5a	3	853.1.003.1A	12	2	872.4.044.1A	28a	25
840.1.186.1AO	13	9	852.1.053.2A	2	2	852.1.148.1B	27a	4	853.1.004.1A	9	11	873.1.005.1A	15	26
840.1.186.1AP	13	9	852.1.068.1A	28a	24	852.1.151.1A	22	15	853.5.003.1A	33	15	873.1.060.1A	32	17
840.1.186.1AQ	13	9	852.1.071.1A	21	7	852.1.154.1A	25	3	856.1.001.1A	3	6	875.1.048.2A	16	10
840.1.186.1AR	13	9	852.1.071.1A	33	6	852.1.156.1A	34	15	856.1.023.1A	27a	18	875.1.065.1A	1d	3

CATALOGUE No: *915.1.204.1A*
ISSUED: *02 - 04*

INDEX

CODE No.	Drwg.	POS. N.	CODE No.	Drwg.	POS. N.	CODE No.	Drwg.	POS. N.	CODE No.	Drwg.	POS. N.	CODE No.	Drwg.	POS. N.
875.1.099.1A	28	14	886.5.014.1A	21	27	88713.1806	1a	6	88765.1075	1c	21	88765.1242	1d	0
876.1.086.1A	17	8	886.5.015.1A	16	6	88713.1821	1a	9	88765.1076	1c	21	88765.1243	1d	0
876.2.003.1A	29	1	886.5.033.1A	32a	9	88713.1832	1	9	88765.1077	1c	21	88765.1244	1d	0
876.2.004.1A	29	9	886.5.042.1A	27a	31	88713.1886	1	13	88765.1126	1c	6	88765.1245	1d	0
877.1.090.1A	27a	25	88700.5665	1	10	88713.1904	1a	15	88765.1126A	1c	4	88765.1298	1	3
877.1.091.1A	25	21	88700.5749	1	14	88713.1906	1a	19	88765.1126B	1c	12	88765.1363A	1	7
881.1.012.1A	2	32	88713.0123	1	4	88713.1914	1a	18	88765.1126C	1c	11	88765.1363B	1	7
881.1.030.1A	11a	22	88713.0869	1	15	88713.1920	1a	8	88765.1126D	1c	14	88765.1363C	1	7
881.1.030.1A	14a	9	88713.0870	1	16	88713.1980	1a	16	88765.1126E	1c	9	88765.1363D	1	7
881.1.034.1A	12	18	88713.0957	1b	12	88713.1994	1a	10	88765.1126F	1c	13	88765.1363E	1	7
881.1.040.1A	32	9	88713.1010	1a	20	88713.2011	1a	7	88765.1126G	1c	17	88765.1369A	1c	24
882.1.003.1A	8	11	88713.1037	1b	6	88713.2060	1a	11	88765.1126H	1c	16	88765.1369B	1c	24
882.1.006.1A	2	16	88713.1057	1b	11	88713.2066	1a	17	88765.1126L	1c	19	88765.1369C	1c	24
884.4.006.1A	26	26	88713.1058	1b	7	88713.2068	1a	1	88765.1126M	1c	18	88765.1369D	1c	24
884.5.001.1A	21	5	88713.1062	1b	9	88713.2069	1a	2	88765.1126N	1c	7	88765.1369E	1c	24
884.5.003.1A	22	10	88713.1068	1b	2	88713.2096	1	1	88765.1126P	1c	10	88765.1371	1c	25
884.5.011.1A	11a	8	88713.1071	1b	10	88713.2102	1a	4	88765.1126Q	1c	5	88765.1372	1c	26
884.5.013.1A	5a	4	88713.1072	1b	1	88713.2133	1	12	88765.1126R	1c	3	88765.1373	1c	27
886.4.003.1A	11	10	88713.1074	1b	4	88713.2346	1	17	88765.1126S	1c	22	88765.1374	1c	28
886.4.033.1A	9	4	88713.1077	1b	5	88713.2409	1b	15	88765.1126T	1c	23	893.1.003.1A	30	14
886.4.034.1A	9	18	88713.1091	1	11	88713.2593	1	8	88765.1126T	1d	16	893.1.005.1A	5	11
886.4.035.1A	11	5	88713.1096	1b	14	88765.0999	1	6	88765.1126U	1c	20	893.2.006.2A	10	7
886.4.037.1A	9	6	88713.1344	1b	13	88765.1000	1	5	88765.1126V	1c	8	893.4.005.1A	25	27
886.4.048.1A	31	13	88713.1429	1	2	88765.1005	1	5	88765.1126Z	1c	1	893.4.006.1A	30	13
886.4.055.1A	32	7	88713.1749	1a	13	88765.1006	1	5	88765.1181	1a	5	894.1.014.1A	9	23
886.5.007.1A	15	16	88713.1791	1a	14	88765.1073	1c	21	88765.1188	1a	12	895.2.003.1A	32	6
886.5.011.1A	7	7	88713.1805	1a	3	88765.1074	1c	21	88765.1241	1d	0	913.7.091.1A	27	5

CATALOGUE No: *915.1.204.1A*
ISSUED: *02 - 04*

INDEX

CODE No.	Drwg.	POS. N.
914.7.023.1A	1c	2
914.7.023.1B	1c	2
914.7.023.1C	1c	2
914.7.023.1D	1c	2
914.7.023.1E	1c	2
926.1.003.1A	34a	6
930.1.004.1A	21a	2
930.4.011.1A	28	6
930.4.020.1A	15	27
930.4.021.1A	5a	2
930.4.022.1A	10	20
930.4.023.1A	3	14
930.4.034.1A	5	6
930.4.035.1A	4	16
930.4.039.1A	26	31
930.4.049.1A	3	30
930.4.052.1A	26	2
930.5.005.1A	11a	19
930.5.006.2B	11a	20
930.5.007.1A	15	17
934.1.003.2A	29	12
934.1.004.1A	31	11
93783.1524	11	4
93785.1830	10a	8
93823.2018	4	24
93823.2082	5	7
93823.2087	14	4

CODE No.	Drwg.	POS. N.
93823.2087	14a	6
93823.2087	31	18
93823.3156	10	12
93827.0114	10	8
93827.0114	5	12
93827.0114	9	22
94247.0014	10a	3
94247.0014	11a	18
94247.0014	5a	5
94460.1829	6	6
98112.0002	1	4

Spare parts catalogue 749R mon U.S.A.

DUCATI 749

DUCATIMOTORHOLDING	**749**R	**M.Y. '04**	**U.S.A.**
Spare Sparts Department	P.N. 91512041A	Febbraio - February '04	Edizione - Edition 00

DUCATIMOTORHOLDING	**749**R	**M.Y. '04**	**U.S.A.**
Spare Sparts Department	P.N. 91512041A	Febbraio - February '04	Edizione - Edition 00

DUCATIMOTORHOLDING	**749**R	**M.Y. '04**	**U.S.A.**
Spare Sparts Department	P.N. 91512041A	Febbraio - February '04	Edizione - Edition 00

DUCATIMOTORHOLDING	**749**R	**M.Y. '04**	**U.S.A.**
Spare Sparts Department	P.N. 91512041A	Febbraio - February '04	Edizione - Edition 00